Cutting and bending machine

Type C067

Translation of the original operating manual

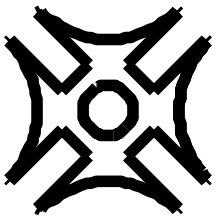

Burst & Zick GmbH

Reservation of ownership

We reserve all rights for this document.
It may not be duplicated nor made accessible to third parties without our permission.
This documentation and the information contained therein were compiled with due diligence.

However Burst & Zick GmbH does not provide any guarantee for printing and other errors or the resulting damages.

Version: 4.3

As of: July 2021

Author: Burst & Zick GmbH
Vorrichtungsbau
An der Rossweid 8
D – 76229 Karlsruhe
Tel. +49 721/61 17 75
Fax. +49 721/61 53 92

Burst & Zick GmbH
Vorrichtungsbau
An der Rossweid 8
D – 76229 Karlsruhe
Tel. +49 721/61 17 75
Fax. +49 721/61 53 92
E-Mail: kontakt@burst-zick.com
Internet: www.burst-und-zick.de

EC Declaration of Conformity
In according to EC Machinery Directive 2006/42/EG
Appendix II A

We herewith declare that the machine described hereinafter satisfies the essential safety and health requirements set out in the EC Machinery Directive with regard to its design and construction as well as the type marketed by us.

In case of an alteration of the machine without our agreement this declaration shall become void.

We furthermore point out that for the installation of spare parts only original parts of the company Burst & Zick GmbH may be used.

Description of the machine:	**Cutting, and bending machine**
Machine type:	**C067**
Machine number:	
Applicable directives:	EC Machinery Directive (2006/42/EG appendix II A) EC Low Voltage Directive (2014/35/EG); EC Electromagnetic Compatibility Directive (2014/30/EG)
Applied harmonized standards, particularly:	EN ISO 12100:2010 DIN EN 13857 DIN EN 60204-1 DIN EN 61000-6-1 DIN EN 61000-6-3 DIN EN 14070 was pulled up informatively
Attachment of the CE label:	**CE**
Place/Date/Signature:	Karlsruhe, den 14.07.2023

Managing director

General

1. Notes on industrial safety

The following notes on industrial safety have to be specially adhered to:

- The cutting, forming and bending machine C067 has been constructed according to the current state of the art and conforms to the ESD regulations. Nevertheless, perils may arise from this machine if it is used by untrained personnel or for other than the intended purposes.
- **Statement on the residual risk**
  1. Danger of electric shock if the switchbox is opened while voltage-carrying. Work in and on the electrical equipment may principally only be carried out by qualified electricians.
  2. Danger of contusion and shearing during setup operation.
  3. The electric motor can reach an operating temperature of more than 60°C/140°F.

  The danger areas are marked with signs.



- Applicable accident prevention regulations have to be adhered to by the user, particularly the

  - DGUV Regulation 1

- The machine may only be operated by trained personnel.
- Any mode of operation which can impair the safety of the machine has to be refrained from.
- The user undertakes to operate the machine only in perfect condition.
- Unauthorized alterations or variations which impair safety have to be refrained from.
- Safety devices may principally not be dismantled or put out of operation. If it is indispensable to dismantle safety devices for the purpose of tool changes or for maintenance and repair work, the safety device has to be reinstalled immediately afterwards.

2. Contents

Page

General 4
1. Notes on industrial safety 4
2. Contents 5
3. General description 6
4. Specifications 8
5. Technical data 9

Commissioning 10
1. Installation 10
2. Electric Connection 10
3. Working with the machine 11
3.1 Turn on the machine 11
4. Inserting the sticks 12

Retool 13
1. Basic remarks about the setting 13
2. Tool change 14
3. Setting the cutting length 16
4. Exchanging the feed magazines 17
5. Exchanging the toothed wheel belt 18
1. Remove the protection and release the belt tightener 18

Faults and their rectification 19

Maintenance 21
1. Maintenance Plan 21

Technical documents 22
1. Wiring diagram C067 22
2. Parts and spares list C 067 electrical parts 23
3. Spares list C 067 (mechanical parts) 24
3.1. Basic machine 24
3.2. Magazine for TO 220 24
4. Spare parts catalogue 25

3. General description

The C067 cutting and bending machine was especially developed for processing power transistors of the type TO126, TO128 and T.220.

The leads can additionally be equipped with a clamped or zig zag form. The tools are equipped with strain relief slides which prevent the component body from being stressed when bending and cutting the leads.
The feed tubes as well as the bending and the stamping moulds of the tools are designed for specific components and are produced according to customer requirements and samples.
The transistors are either fed through sticks or individually added manually into the magazine tray. The components which have been cut are stored in a container separately from the wire waste.

Operational sequence:

The shaping of the connecting wires as well as bending and cutting is carried out in a single operation. During processing, the connection wires are clamped to avoid impermissible tensile loads on the component body to



Fig. 1

Cutting – and bending machine C067

4. Specifications

1. The components can only be bent towards the right (seen from the operator's side). The magazine tray must therefore be adapted to the desired shape of the component.
2. For beads with multiple waves, e.g. zig zag wave, only two wires can be bent.
3. The components to be bent must have a straight seat.

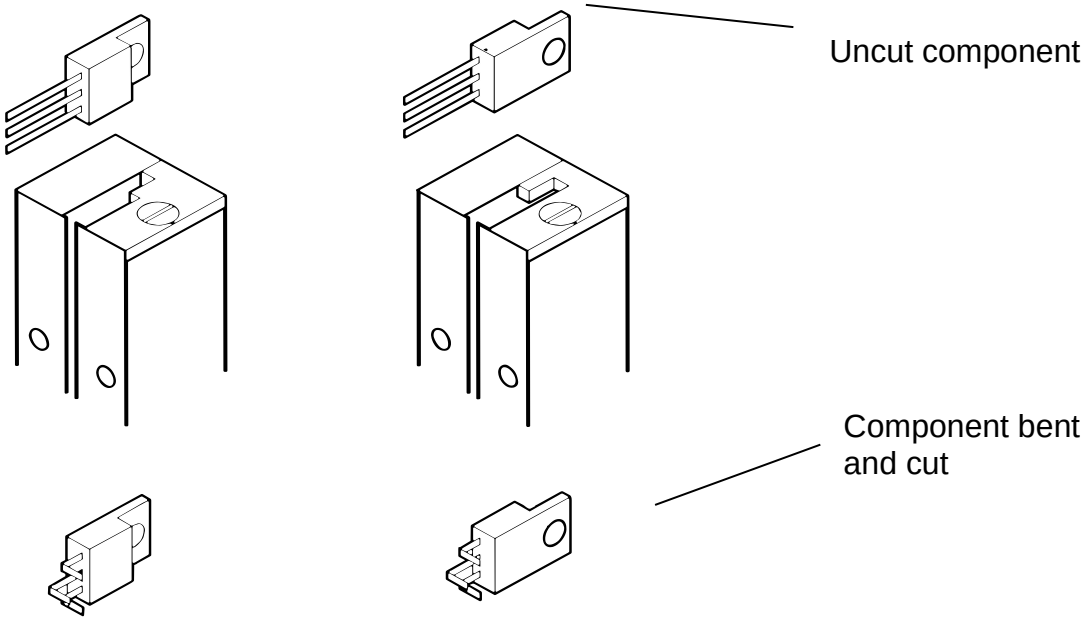

Figure 2

Magazine shapes

5. Technical data

Dimensions	widht:	app. 340 mm
	depth:	app. 450 mm
	Height:	app. 460 mm
Gewicht:		app. 31 kg
Taktzeit:		app. 3500 pieces / hour
Electrical connection		230V/50Hz- 60Hz or 115V/50Hz-60Hz look at the lable
Lead Ø		Every wire size from a power transistor

Commissioning

1. Installation

The machine is delivered fully assembled and installed. Please check the shipment immediately with the help of the delivery note and/or the packing list. In case the consignment is incomplete or if damages have occurred during transport, please inform us immediately.

Place the machine on a stable, level working table.

2. Electric Connection

Connect power cable with 230V / 50 Hz or 115V 50/60 Hz socket. Look at the label wich Voltage you need.

3. Working with the machine

3.1 Turn on the machine

1. Close protection cover (for safety reasons the machine can only be started with closed protection cover).
2. Actuate power switch.
3. Set direction switch to forward.
4. Push star button.
5. On potentiometer increase the speed gradually until the desired number of cycles is reached. Normally 100%.
6. To stop the machine push sop button and turn potentiometer to zero.

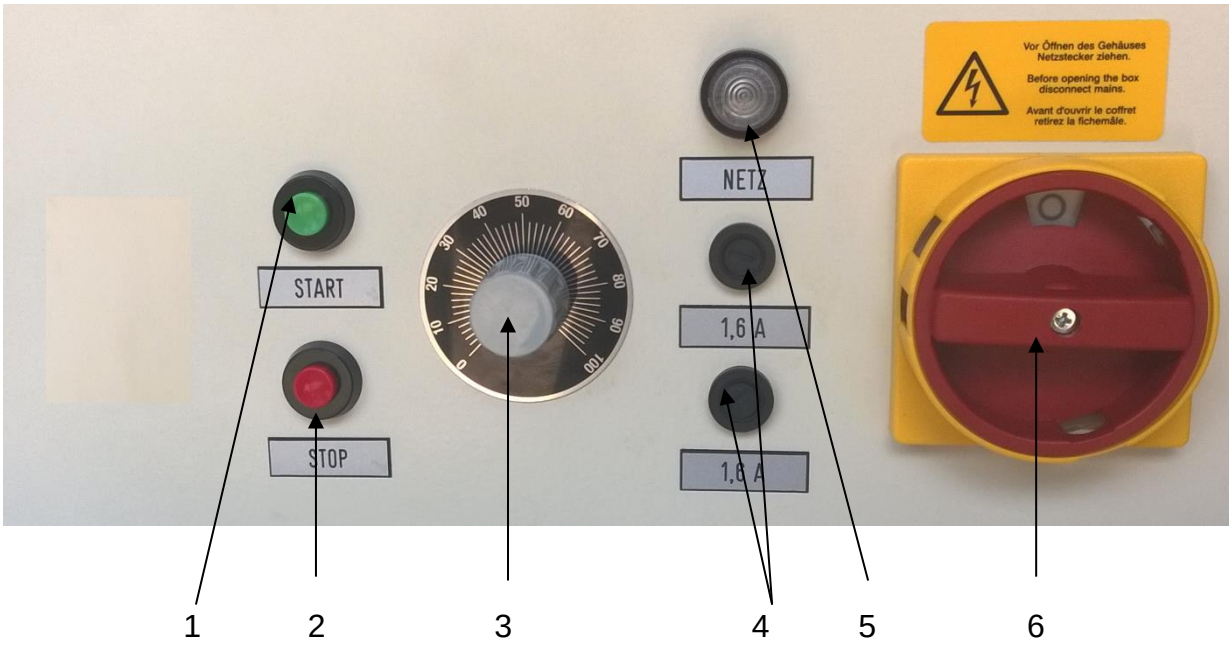

1. Start button
2. Stop button
3. Speed potentiometer
4. Power light
5. Fuses
6. Main switch

Figure 3

Control panel

4. Inserting the sticks

Procedure:

1. Place the lock upwards (vertically).
2. First place the full stick horizontally from the right onto the component feed and then swing it upwards into the vertical position. (figure)
3. Swing the lock downwards again.

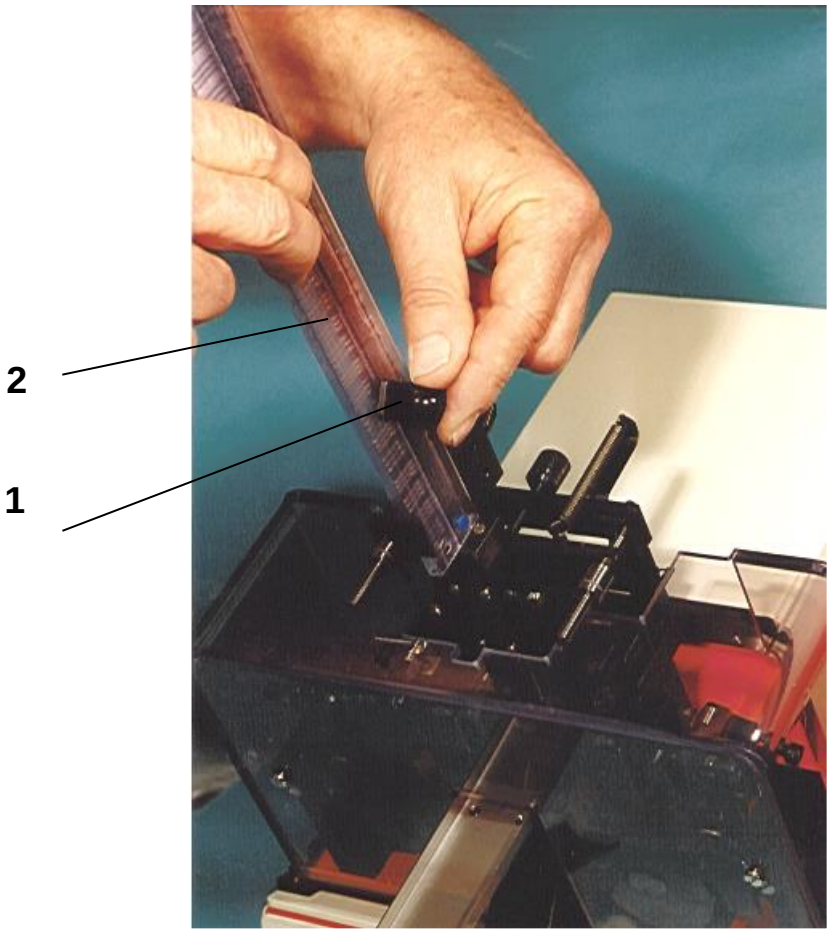

Figure 4 Inserting the sticks

1. Lock
2. Stick

Retool

1. Basic remarks about the setting

1.1. The machine has been factory set. The manufacturer should be consulted about any changes to the setting or to the tools in order to avoid any damage occurring during operation.

1.2. During maintenance and repair work secure the machine so that it cannot be activated unintentionally (without authorisation).



1.3. Set the main switch to “OFF” and pull off the mains plug.

1.4. After setting the machine run at least 1 cycle on the hand wheel in the direction of the arrow.

1.5. For all settings which you make to the machine you must ensure that subsequently all screws/bolts and nuts which were loosened are tightened again even if this is not expressly mentioned in the text below.

1.6. Please additionally note that all belts expand after being in use for a while. Check the individual belt drives and tighten them if necessary.



2. Tool change



1. Disconnect the machine from the power supply.
2. Remove the Plexiglas hood.
3. Move the tools apart, in other words bring them to their rear end position.
4. Unlock the tools. (fold catch (1) upwards)
5. Remove the two fastening bolts (2) and take out the tool retainers.
6. Remove the tool inserts from the retainers.
7. When inserting the new tool inserts the following points should be observed:
   - Each set of tools consists of 4 inserts
   - In order to avoid them getting mixed up each part of a tool set is marked with the same two-digit number. This number additionally provides information about the shape of the tool. This is important when ordering spare tools.

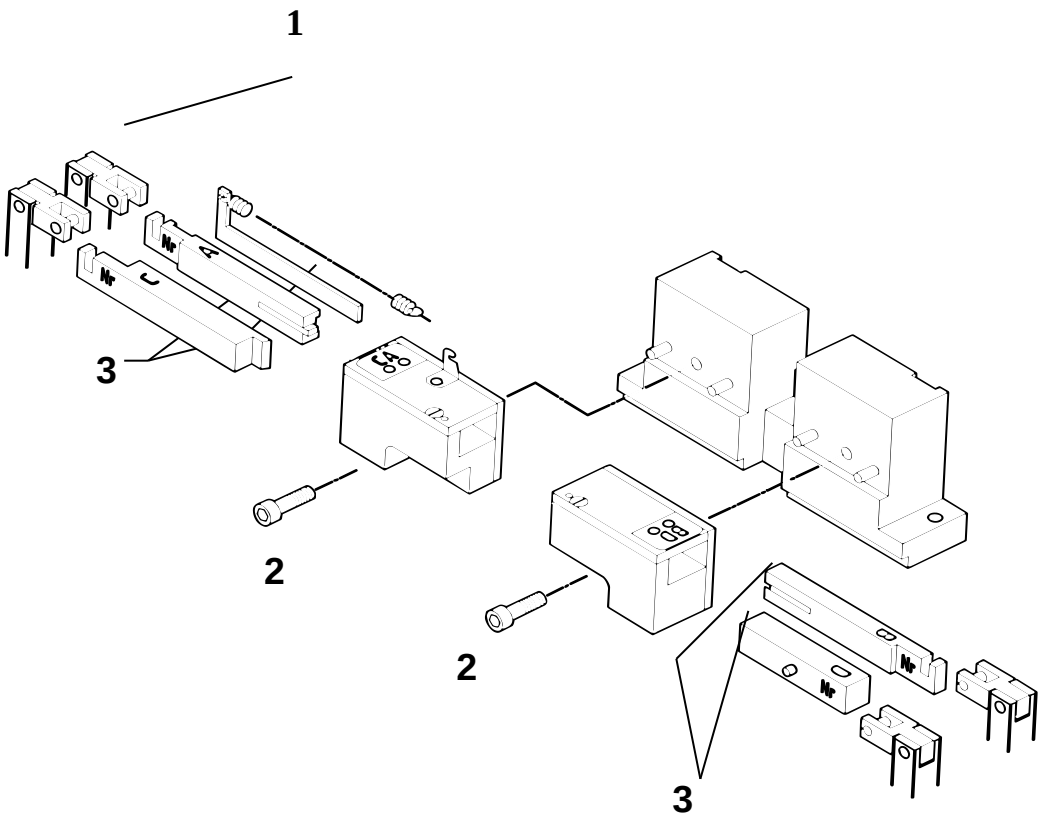

1. Catch - tool drive
2. Fastening bolts
3. Tool set no.

Figure 5 changing tools

- Tool holders and tool inserts are marked with the letters A - D.
  When inserting please ensure that these markings correlate.
- Always insert the inserts C (left tool) and D (right tool) first.

8. Insert the tool retainers into the machine and fasten them with 1 cylinder screw each.
   Care must be taken that the seat is clean!
9. Run the machine 1 cycle with the hand wheel.
10. Re-attach the Plexiglas protective hood.

3. Setting the cutting length

With the micrometer screw (1) now set the dimension “X” between the bottom edge and the bending of the component wire.
For tools with a flush cut the wire length is set here.

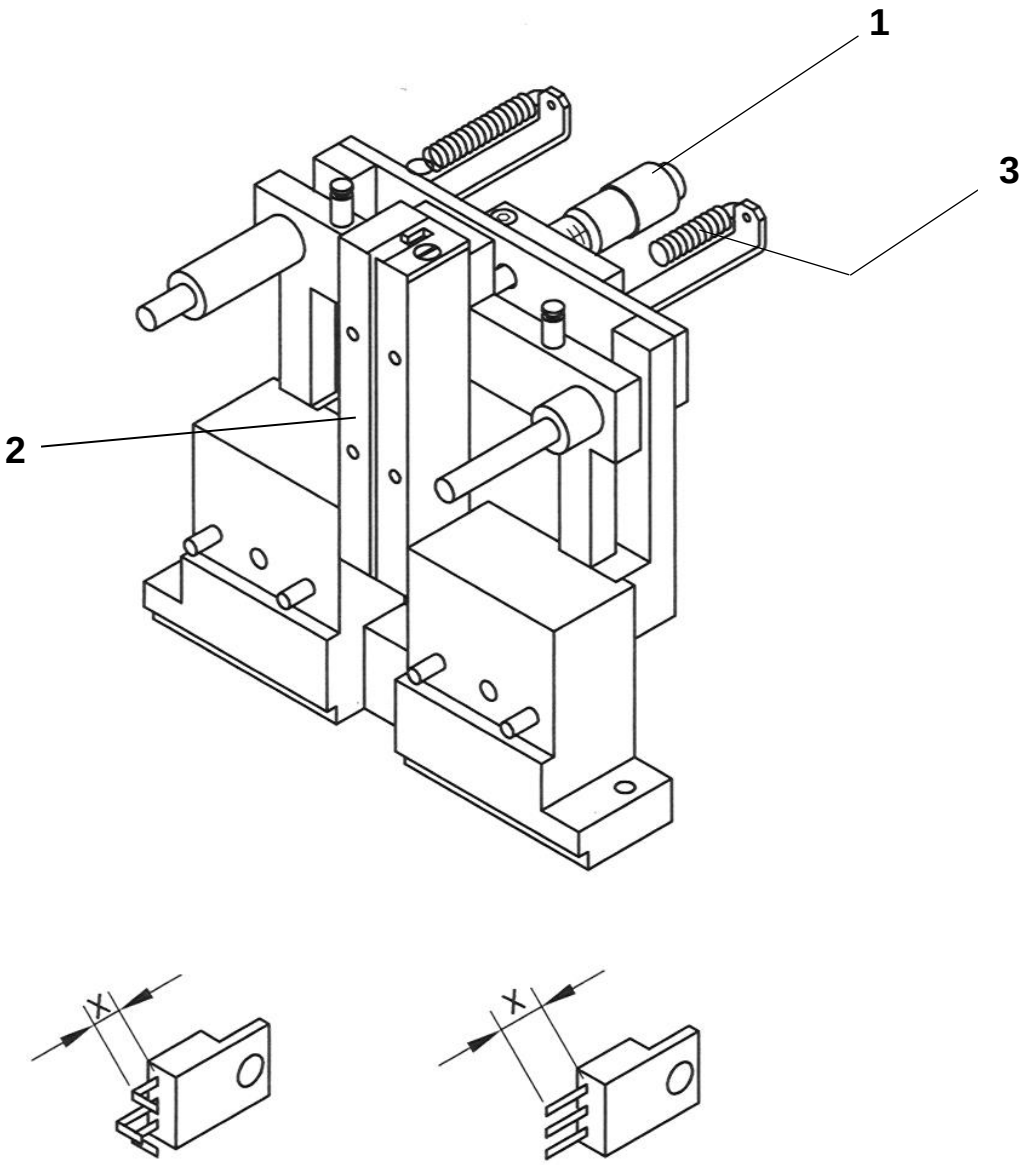

Figure 6 - Setting the cutting length

1. Micrometer screw
2. Feed magazine
3. Tension spring

4. Exchanging the feed magazines

As stated at the beginning the feed magazines (figure 6 pos.2) are dependent on the respective shape of the component and also have to be exchanged when the machine is fitted for another shape.

Procedure:

1. Remove the tool retainers.
2. Release the tension springs (figure 6 pos.3) and pull out the entire magazine out of the guide towards the front.
3. Assemble a new feed magazine in reverse order.

5. Exchanging the toothed wheel belt

1. Remove the protection and release the belt tightener.
2. Release the set screws item 1 and push the coupling right onto the motor shaft.
3. Release the set screws item 2 on both toothed belt wheels and pull off these wheels together with the belt from the cam shafts.

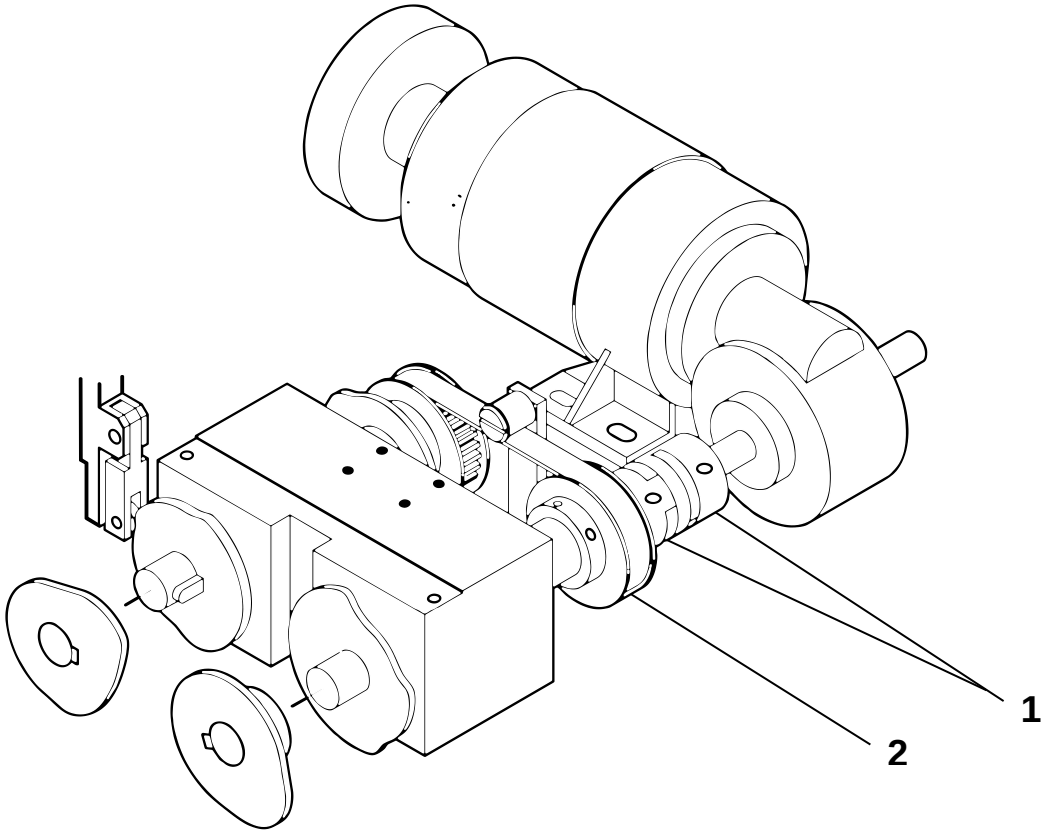

Figure 7 - Exchanging the toothed belt

Please note: For reasons of clarity the right actuation lever has not been shown. Due to the same reason the outer cams have been depicted after having been removed.

4. Place a new belt on the wheels and push the wheels onto the cam shafts together with the belt.



5. First roughly align the cams with each other as shown in fig. 7.
   The inner pair of cams is the one which is important.

Figure 8 – Alignment of the inner pair of cams with each other

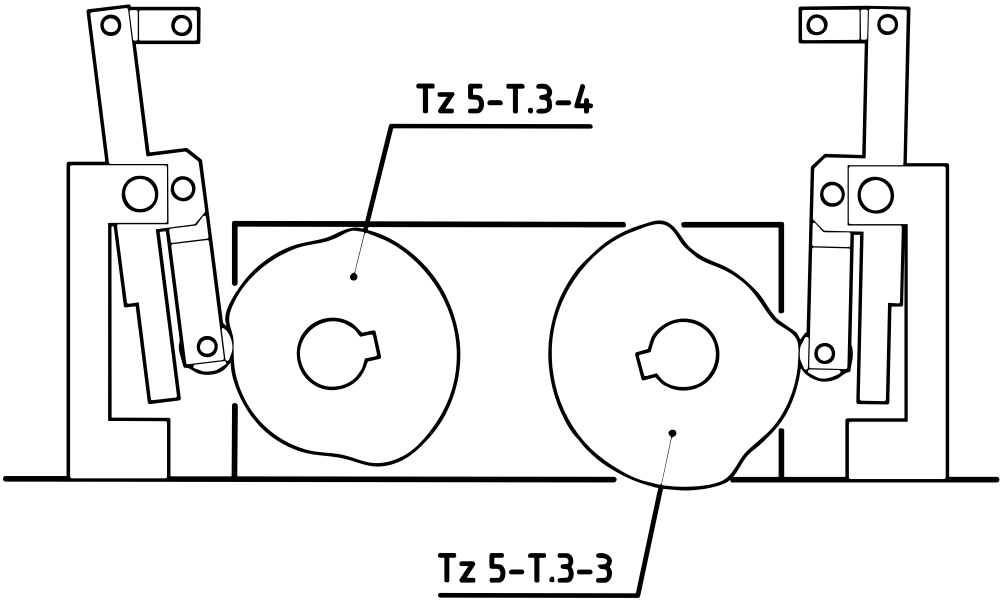

6. Re-attach the motor coupling back at the original position. Retighten the set screws (item 1 and item 2).
7. Make the fine adjustments to the movement.
   - 7.1. First move the tools towards each other.
   - 7.2. Continue to turn the machine on the hand wheel towards the direction of the arrow and observe the tools A and B.
     Tool A must lead tool B. In other words, tool B may only traverse backwards at the moment when the holding down-clamp on tool A has released the component. (lifts from the component).
     Correct the setting by correspondingly turning the right cam after having released the set screws (item 2).

Now finally tighten the set screws (item1+2), retighten the belt and attach the protection.

Faults and their rectification

Caution: **All maintenance and repair work may only be performed by qualified and trained personnel!**

At appropiate handling the device works almost troublefree.
If any disturbances should arise first inform your supplier.

Your Contact: Company **Burst & Zick GmbH Tel. +49 (0)721 / 611775**

The type of defect first will be discussed. The Result should be held in a protocol (see table below). The Informations should be like this: Malfunctions, Causes, actions for corrections of deficiencies.

Malfunctions	Causes	Actions

Maintenance

1. Maintenance Plan

	Interval				Task
	d	w	m	y	
Machine, general	X				Vacuum-clean or clean from wire clip-pings and other remains with a brush.
Tools		X			Check bending and cutting tools for tin deposits and remove these, if necessary, without damaging the tools.
All sliding parts con-veyor graspers etc.		X			Clean and lubricate slightly with oil, be careful that no lubricant enters the region if the cutting tool! **No grease**
Belt (it is under the sheet prtotection cover)			X		Check tension. Tighten belt if necessary.
Electrical check			X	X	To note local provisions as in Germany DGUV Regulation 3 !

d = daily
w = weekly
m = monthly
y = annualy

Caution: All maintenance and repair work may only be performed by trained specialists!

Caution: No grease may be used for lubricating moving and sliding parts. Use thin lubricants only, such as spray oil.





Technical documents

1. Wiring diagram C067

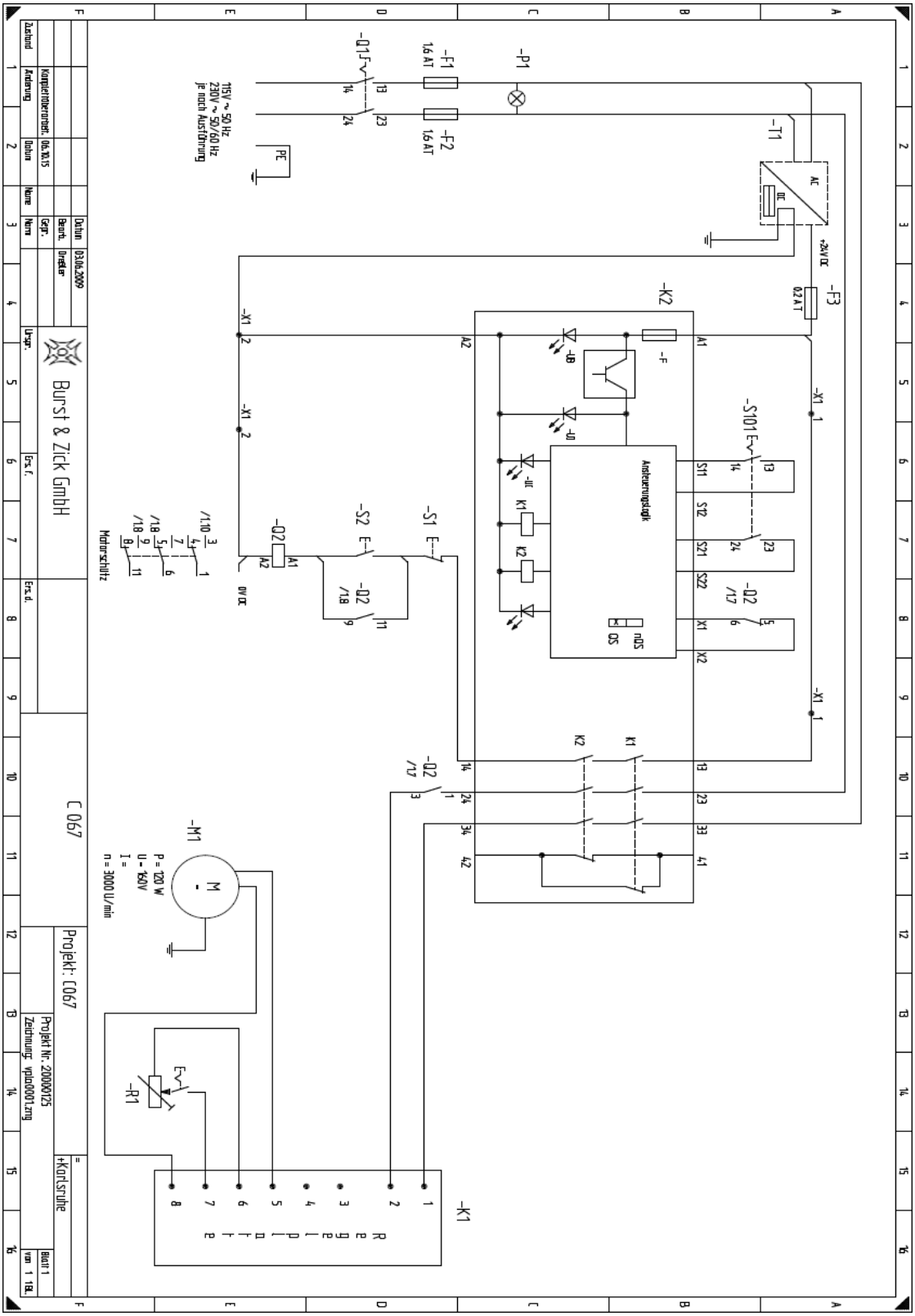

2. Parts and spares list C 067 electrical parts

Name	Type	Order number	Recom-mended parts
Q1	Main switch	CA10 T302/D-A004 EG	
F1,F2	Fuse holder FEF Locking device Fuse 1,6A	3101.0210 0696.0033 419-993	 10 Stk.
F3	Fuse holder Fuse 0,2 AT	UK 5 HESI 5x20mm	
P1	Lamp socket LED Lamp 230V Cap	1.60502.1020214 59102315 5.52011.026	 1 Stk.
T1	Power supply	STEP-PS/1AC/24VDC/0,5	
Q2	Relais Relaissocket	60.13.9.0024.0070 90.03	
K2	Safety relais	SRB301MC	
X1	Terminal blocks	WDK 2,5	
K1	Motor control board 115V or 230 V depending on the version of the ma-chine. Please specify when ordering necessarily.	801-00000	1 Stk.
R2	Potentiometer 470 KOhm	CIP20C-KS-IL-LIN 470K	1 Stk.
S1	Push button red	101001011/0301	
S2	Push button green	101001001/0507	
S101	Safety switch Actuator	AZ 16-02 zvrk AZ 15/16 B1	
M1	Direct current motor	PM1 85/40 160V DC 3000 U/min 2. Wellenende Getriebe: VE31D-B-25 i=55:1	

3. Spares list C 067 (mechanical parts)

3.1. Basic machine

Recom. qty.	Designation	Order no.
1 set	Pressure springs for tool drive lever (4 pcs)	43358
1 set	Cams (5 pcs)	Tz. 5 T3/1 to Tz 5 T 3/5)
1 pce	Needle bearing for belt tightener	NK 8-16
1 pce	Deep groove ball bearing	Tz. 3 T. 30
1 pce	Toothed belt	T 5 / 330
1 pce	Tension spring for holding down clamp	14 776
1 pce	Tension spring for separation	16 528
1 set	Tension springs for magazine (2pcs)	16 529
6 pce	Spacer sleeve	Tz. 3 T. 9
2 pce	Cyl. pin ∅8m6 x 60	Tz. 3 T. 31

w) The cams are marked 1 to 5

3.2. Magazine for TO 220

Recom. qty.	Designation	Order no.
1 pce	Pressure spring magazine	D – 029
1 pce	Pressure spring magazine	D – 095C
1 pce	Pressure spring separation	D – 080
1 set	Guide plate (1 pce left and right)	Tz. 8 T. 9
1 set	Recirculating ball bushes for magazine (2pcs)	N – 6 V
1 set	Pressure retention (2 pcs)	Tz. 8 T. 15

4. Spare parts catalogue

Contents

Base frame ..... Tz 1,2
Base plate ..... Tz 2,2
Tool lever ..... Tz 3,2
Tool adjustment ..... Tz 4,2
Cams and drive ..... Tz 5,2
Control lever separation ..... Tz 6.2
Magazine ..... Tz 8.2
Tool block ..... Tz 9.2

Tz 1.2 - Base frame

Item	Qty.	Drawing no.	Designation	Remarks
9	1	C067 Tz 1.2 T9	Base plate	
10	1	C067 Tz 1.2 T.10	Support, left	
11	1	C067 Tz 1.2 T.11	Support, right	
12	1	C067 Tz 1.2 T.12	Intermediate plate	
13	2	C067 Tz 1.2 T.13	Side sign	
14	1	C067 Tz 1.2 T.14	Cover plate	
15	1	C067 Tz 1.2 T.15	Cover plate	
20	4		Rubber foot	

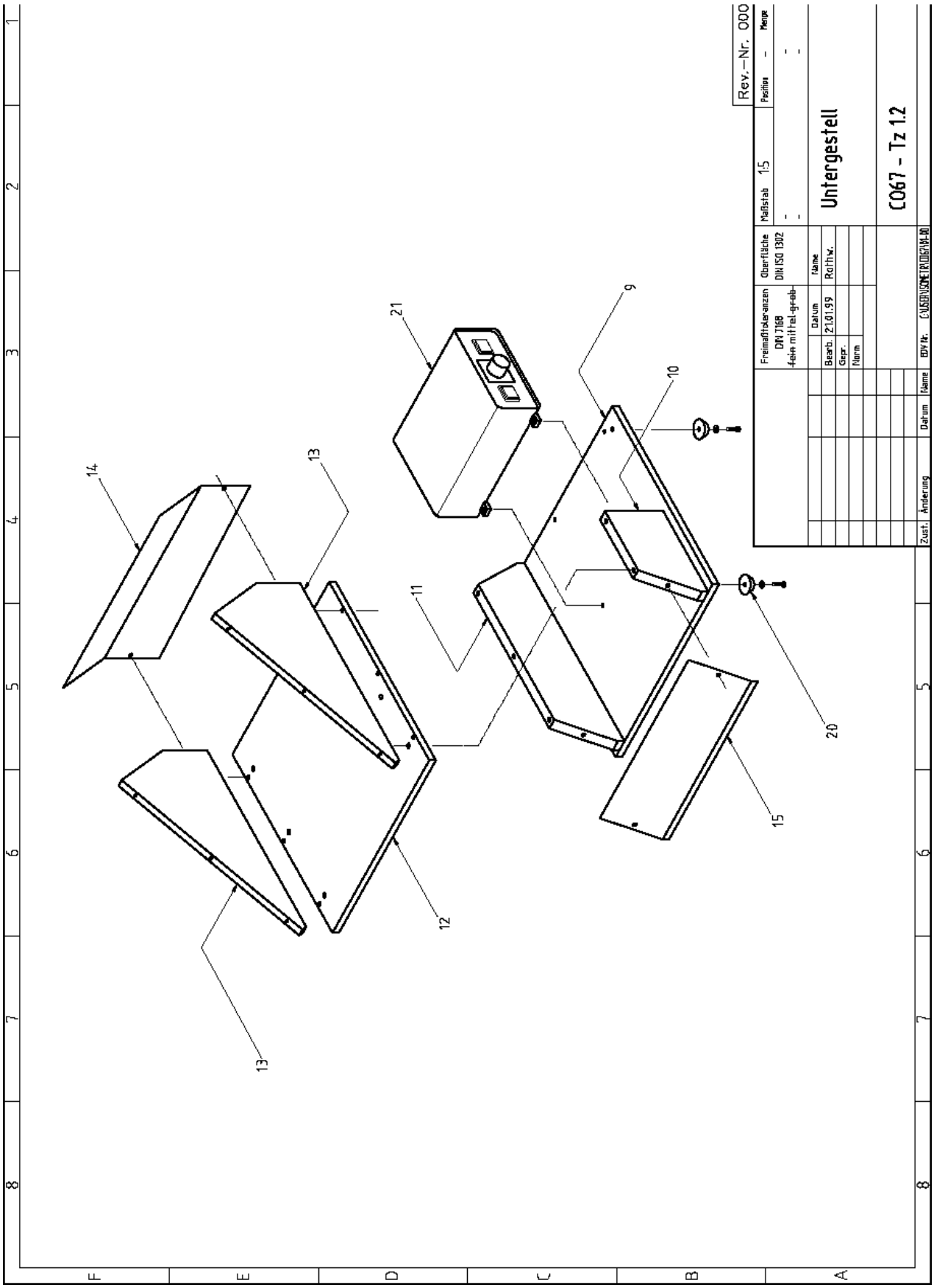
Rev.-Nr. 000
Maßstab 1:5
Position
Menge
Untergestell
C067 - Tz 1.2
Freimaßtoleranzen
DIN 7168
Oberfläche
DIN ISO 1302
Datum
Name
Bearb. 21.01.99
Rothw.
Gepr.
Norm
Zust.
Änderung
Datum
Name
9
10
11
12
13
14
15
20
21

Tz 2.2 - Base plate

Item	Qty.	Drawing no.	Designation	Remarks
2	1	C067 Tz 2 T.2	Pillow bock	
11	1	C067 Tz 2 T.11	Bolt	
12	1	C067 Tz 2 T.12	Protective hood	W)
14	1	C067 Tz 2 T.14	Bracket	
15	1	C067 Tz 2 T.15	Plate	
17	1	C067 TZ 2 T.17	Support plate	
18	1	C067 Tz 2 T.18	Protective hood	
19	1	C067 Tz 2 T.19	Bracket, right	
20	1	C067 Tz 2 T.20	Bracket, left	
21	1	C067 Tz 2 T.21	Motor intermediate plate	
22	2	C067 Tz 2 T.22	Collar screw	
30	1		Needle bearing NK8 /16 TN	W)

W) = Recommended spares

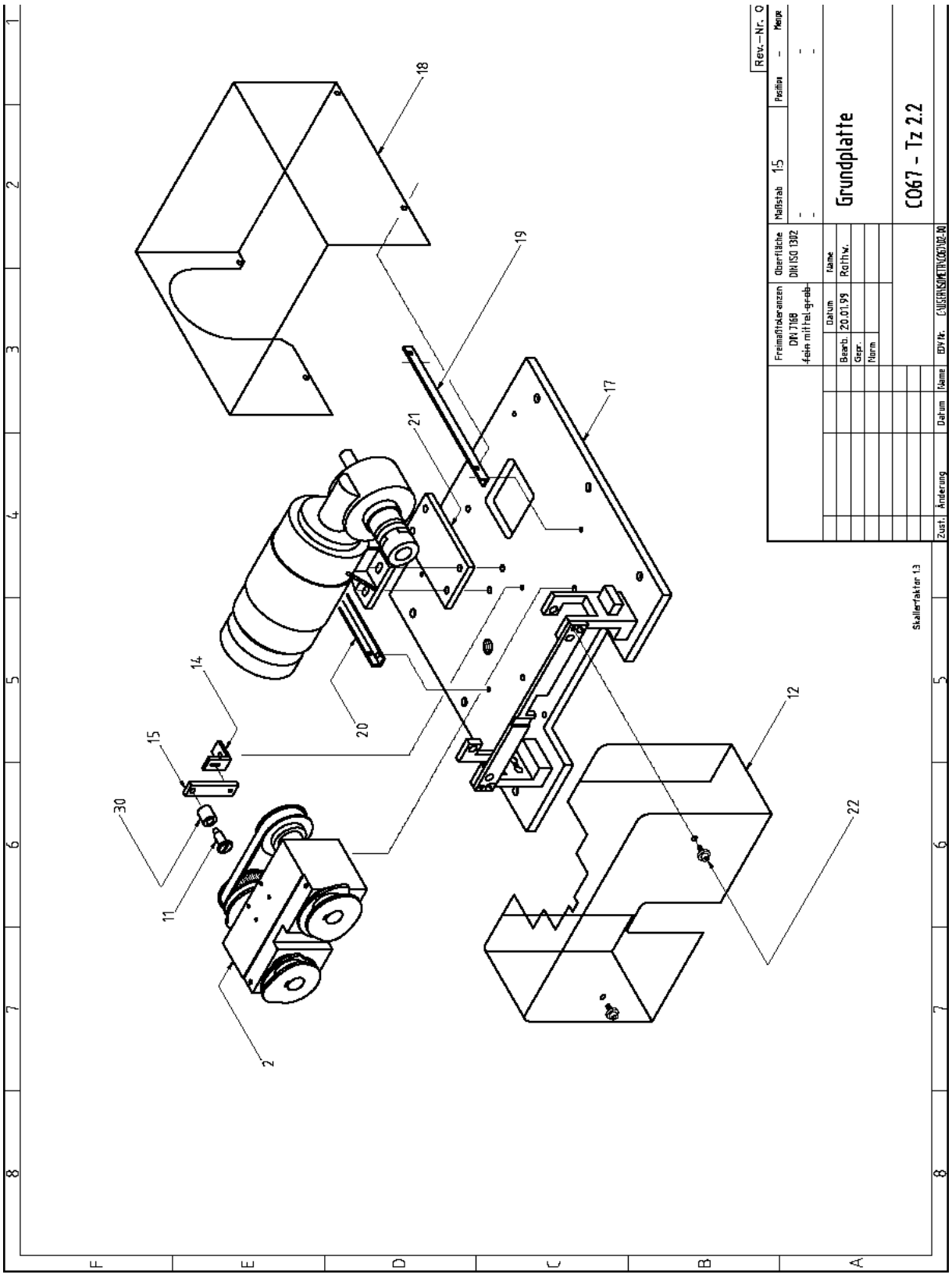
Rev.-Nr. 0
Freimaßtoleranzen DIN 7168 fein mittel grob
Oberfläche DIN ISO 1302
Maßstab 1:5
Position
Menge
Datum
Name
Bearb. 20.01.99 Rathw.
Gepr.
Norm
Grundplatte
C067 - Tz 2.2
Zust. Änderung
Datum
Name
EDV-Nr.
Skalierfaktor 1.3
18
19
21
17
14
15
20
12
30
11
22
2

Tz 3.2 - Tool lever

Item	Qty.	Drawing no.	Designation	Remarks
6	1	C067 Tz 3 T. 6	Retainer	
7	1	C067 Tz 3 T. 7	Rail	
8	1	C067 Tz 3 T. 8	Bracket	
9	6	C067 Tz 3 T. 9	Spacer sleeve	
11	1	C067 Tz 3 T. 11	Bracket	
12	1	C067 Tz 3 T. 12	Slide	
13	2	C067 Tz 3 T. 13	Bar	
16	2	C067 Tz 3 T. 16	Pillow bock	
17	4	C067 Tz 3 T. 17	Lever	
18	4	C067 Tz 3 T. 18	Lever	
19	4	C067 Tz 3 T. 19	Lever	
20	1	C067 Tz 3 T. 20	Receiver	
30	4		Deep groove ball bearing 624-2z	
31	2		Cyl. pin ∅8m6 x 60	
32	4		Pressure spring 43358	W)

W) = Recommended spares

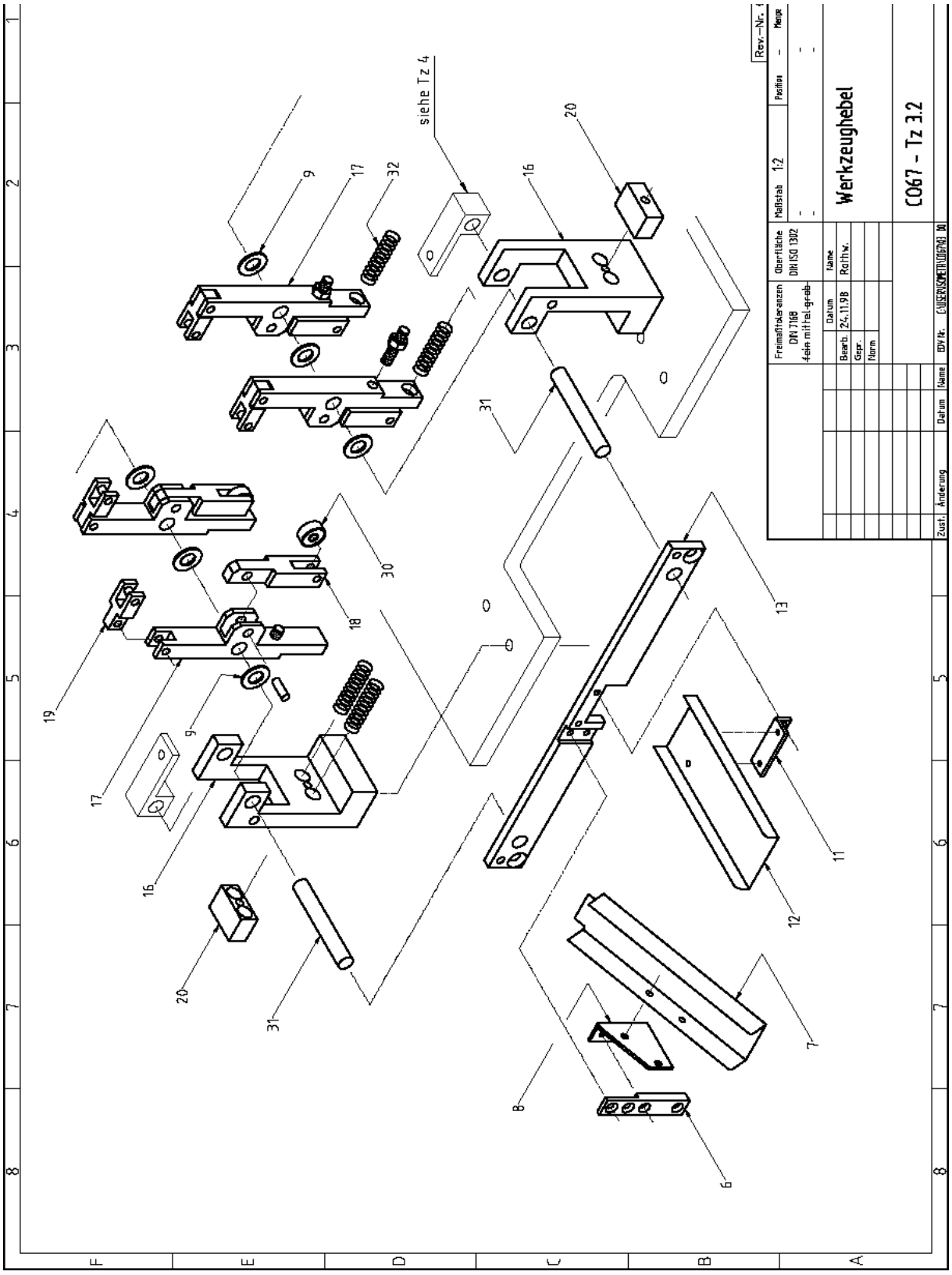
siehe Tz 4
Werkzeughebel
C067 - Tz 3.2
Maßstab 1:2
Freimaßtoleranzen
DIN 7168
fein mittel grob
Oberfläche
DIN ISO 1302
Datum
Name
Bearb. 24.11.98
Rothw.
Gepr.
Norm
Zust.
Änderung
Datum
Name
Rev.-Nr.
Position
Menge

Tz 4.2 - Tool adjustment

Item	Qty.	Drawing no.	Designation	Remarks
1	1	C067 Tz 4 T. 1	Receiver	
2	2	C067Tz 4 T. 2	Retainer	
4	2	C067Tz 4 T. 4	-{}-Spring holder-{}-	
10	1	C067Tz 4 T. 10	Rest	
11	1	C067Tz 4 T. 11	Spring bolt	
12	2	C067Tz 4 T. 12	Bridge	
13	1	C067Tz 4 T. 13	Holder for measuring screw	
14	1	C067Tz 4 T. 14	Protective cover	
20	2		Tension spring no. 16529	W)
21	1		Micrometer screw	
22	2		Cyl. pin ∅6m6 x 60	

W) = Recommended spares

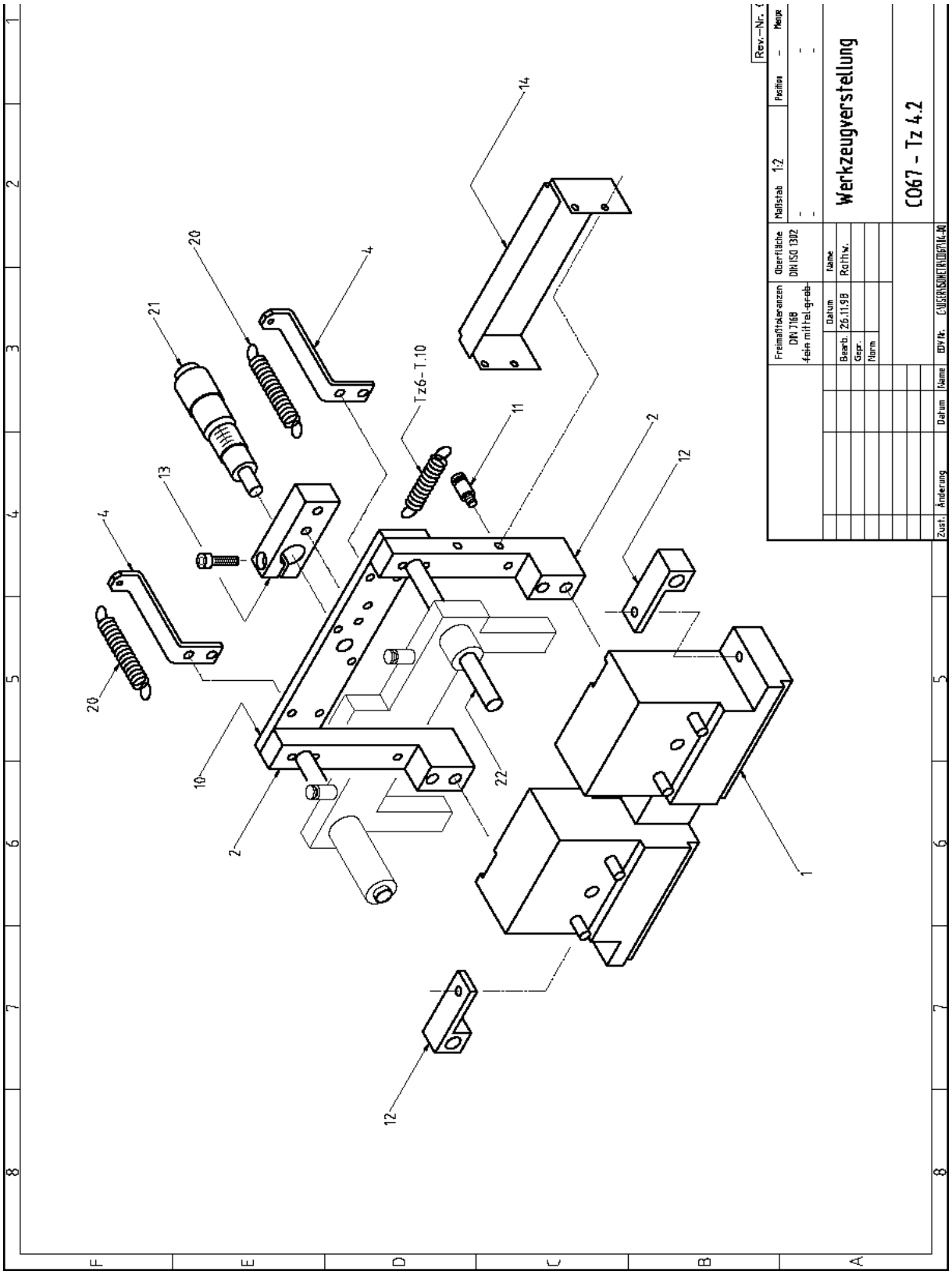
Werkzeugverstellung
C067 - Tz 4.2
Tz6-T.10

Tz 5.2 - Control cams and drive

Item	Qty.	Drawing no.	Designation	Remarks
2	1	C067 Tz 5 T.2	Shaft	
3-1	1	C067 Tz 5 T.3 - 1	Cutting cam, right	W)
3-2	1	C067 Tz 5 T.3 -2	Cutting cam, left	W)
3-3	1	C067 Tz 5 T.3 -3	Stamping cam, right	W)
3-4	1	C067 Tz 5 T.3 -4	Stamping cam, left	W)
3-5	1	C067 Tz 5 T 3 - 5	Separating cam	W)
4-1	2	C067 Tz 5 T.4 - 1	Spacer,	s = 2.7
4-2	1	C067 Tz 5 T.4 -2	Spacer,	s = 3.5
4-3	1	C067 Tz 5 T.4 -3	Spacer,	s = 13.5
5	2	C067 Tz 5 T.5	Toothed belt wheel	
6	1	C067 Tz 5 T.6	Shaft	
7	1	C067 Tz 5 T.7	Hand wheel	
20	4		Deep groove ball bearing 6003-2z	
21	1		Toothed belt T5/330	W)
22	1		Motor coupling OX33G – D33	

W) = Recommended spares

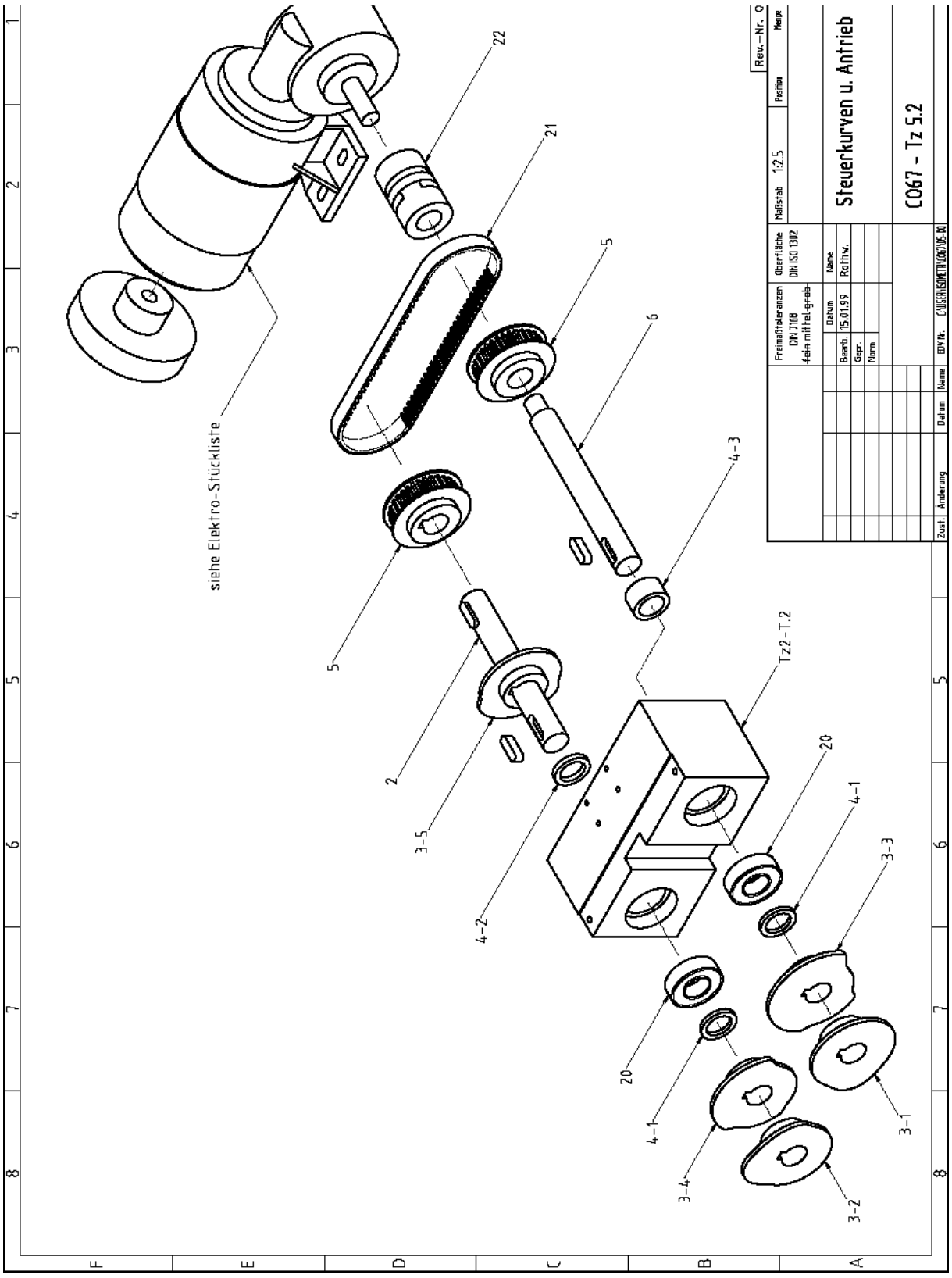
siehe Elektro-Stückliste
22
21
5
6
4-3
5
2
3-5
4-2
Tz2-T.2
20
4-1
3-3
20
4-1
3-4
3-2
3-1
Freimaßtoleranzen
DIN 7168
fein mittel grob
Oberfläche
DIN ISO 1302
Maßstab 1:2.5
Position
Menge
Rev.-Nr. 0
Datum
Name
Bearb. 15.01.99
Rothw.
Gepr.
Norm
Steuerkurven u. Antrieb
C067 - Tz 5.2
Zust.
Änderung
Datum
Name
EDV Nr.

Tz 6.2 - Control lever - separation

Item	Qty.	Drawing no.	Designation	Remarks
1	1	C067 Tz 6 T. 1	Pillow bock	
2	1	C067 Tz 6 T. 2	Lever	
6	1	C067 Tz 6 T. 6	Spring bolt	
7	1	C067 Tz 6 T. 7	Lever	
10	1		Tension spring no. 16528	W)
11	1		Cyl. Pin ∅10m6 x 52	
12	1		Deep groove ball bearing 624-2z	

W) = Recommended spares

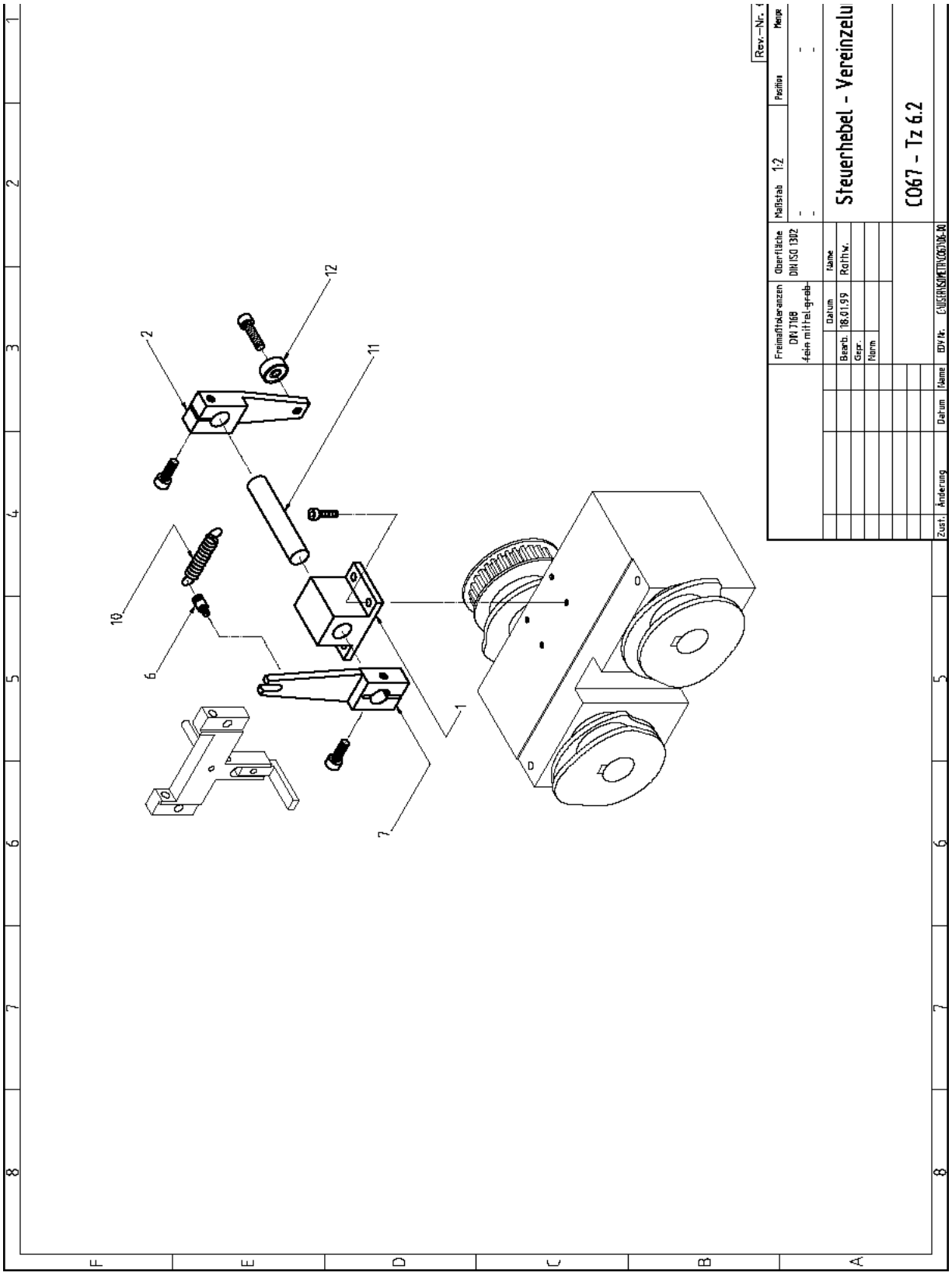
Steuerhebel - Vereinzelu
C067 - Tz 6.2
Maßstab 1:2
Oberfläche DIN ISO 1302
Freimaßtoleranzen DIN 7168 fein mittel grob
Datum
Name
Bearb. 18.01.99 Reithv.
Gepr.
Norm
Zust. Änderung
Datum
Name
1
2
6
7
10
11
12

Tz 8.2 - Magazine

Item	Qty.	Drawing no.	Designation	Remarks
9	2	C067 Tz 8 T. 9	Guide plate	W)
12	1	C067 Tz 8 T. 12	Pin	
15	2	C067 Tz 8 T. 15	Pressure retention	W)
19	1	C067 Tz 8 T. 19	Guide pin	
21	1	C067 Tz 8 T. 21	Guide	
22	1	C067 Tz 8 T. 22	Retainer	
23	1	C067 Tz 8 T. 23	Bracket	
24	1	C067 Tz 8 T. 24	Strap	
25	1	C067 Tz 8 T. 25	Pin	
27	1	C067 Tz 8 T. 27	Magazine, complete	
27a	1	C067 Tz 8 T. 27a	Magazine, complete	Specially for large compo-nents
28	1	C067 Tz 8 T. 28	Guide plate	
29	1	C067 Tz 8 T. 29	Bearing	
30	1	C067 Tz 8 T. 30	Retainer	
31	1	C067 Tz 8 T. 31	Bracket	
32	1	C067 Tz 8 T. 32	Retaining finger	
33	1	C067 Tz 8 T. 33	Retainer	
34	1	C067 Tz 8 T. 34	Protective hood	
35	1	C067 Tz 8 T. 35	Pin	
36	1	C067 Tz 8 T. 36	Bush	
37	1	C067 Tz 8 T. 37	Pin	
38	1	C067 Tz 8 T. 38	Spring bolt	
50	1		Pressure spring D-095 C	
51	1		Pressure spring D-029	
52	1		Pressure spring D-079	
53	2		Recirculating ball bush NL-6V	W)
54	2		Cyl. pin ∅4m6 x 110	

W) = Recommended spares

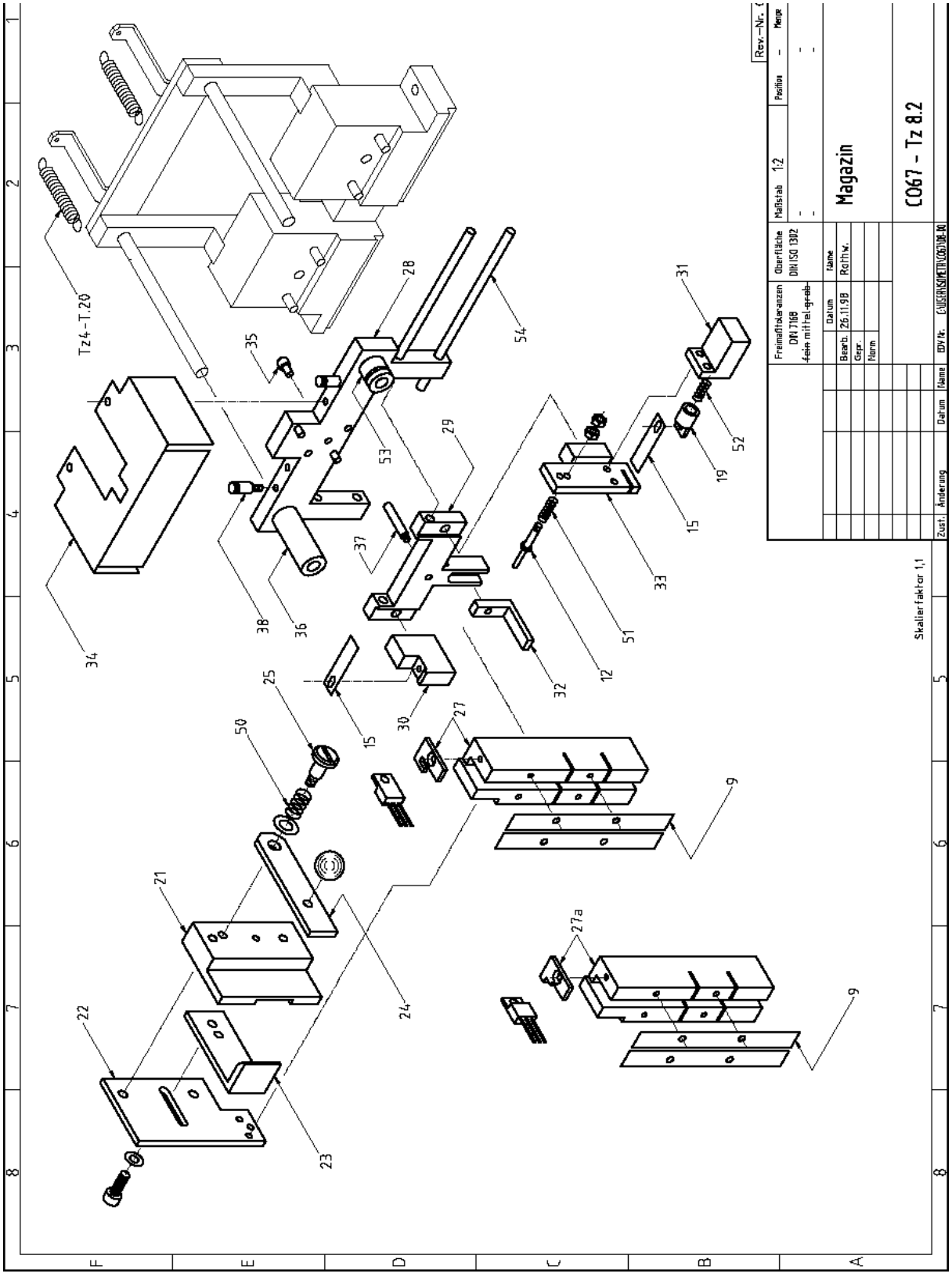
Tz4-T.20
Magazin
C067 - Tz 8.2
Maßstab 1:2
Skalierfaktor 1,1

Tz 9.2 - Tool block

Item	Qty.	Drawing no.	Designation	Remarks
1	2	C067 Tz 9 T. 1	Tool holder	
1a	2	C067 Tz 9 T. 1a	Plate	
2	2	C067 Tz 9 T. 2	Plate	
5	1	C067 Tz 9 T. 5	Bracket	
6	2	C067 Tz 9 T. 7	Lable	
10	1		Tension spring no. 14776	W)

Please note: r Tool holder only available complete

Tool set A-D acc. to sample component

W) = Recommended spares

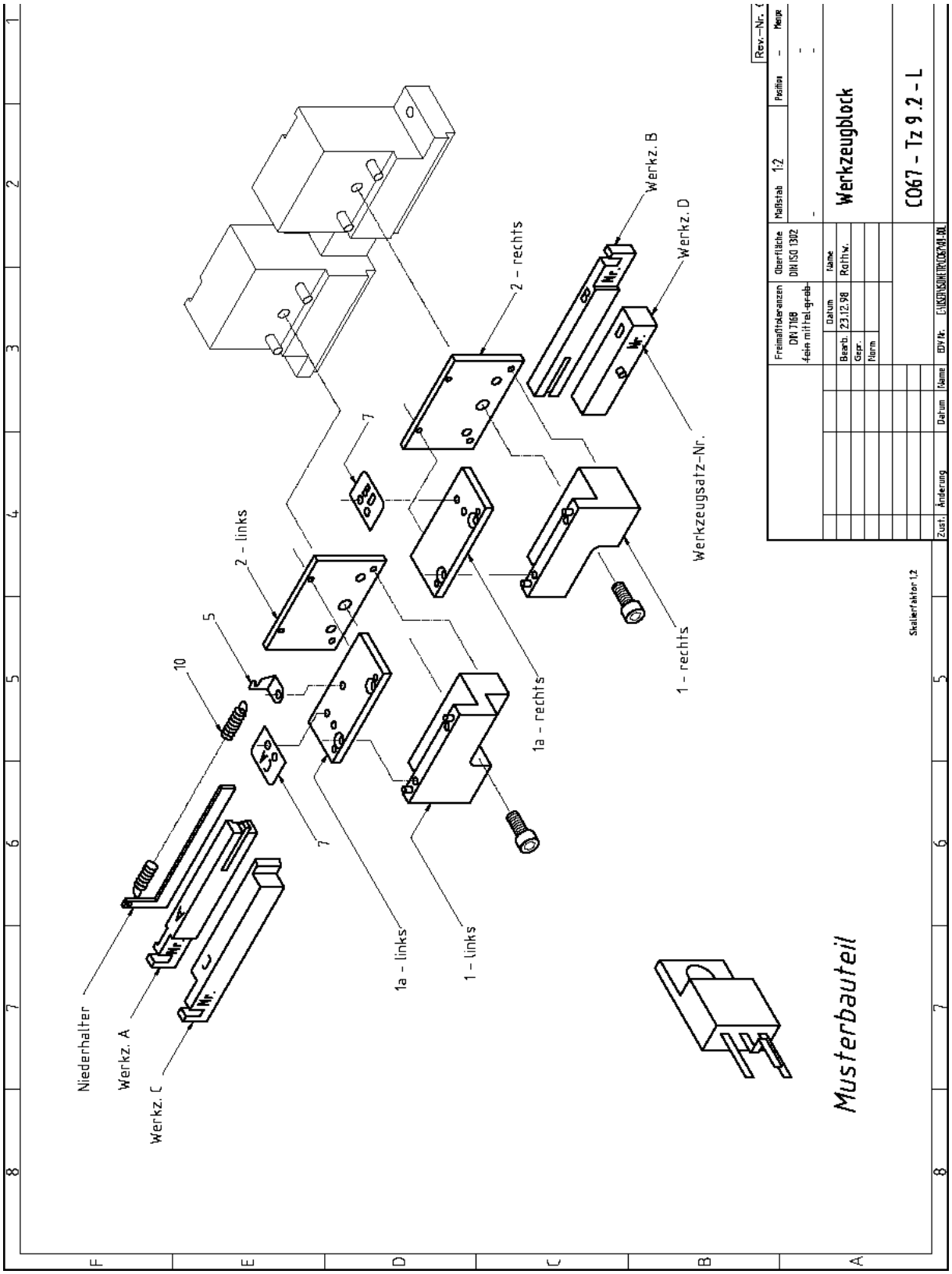
Niederhalter
Werkz. A
Werkz. C
10
5
7
1a - links
1 - links
2 - links
1a - rechts
1 - rechts
2 - rechts
Werkz. B
Werkz. D
Werkzeugsatz-Nr.
Musterbauteil
Maßstab 1:2
Oberfläche DIN ISO 1302
Freimaßtoleranzen DIN 7168 fein mittel grob
Werkzeugblock
C067 - Tz 9.2 - L
Skalierfaktor 1:2

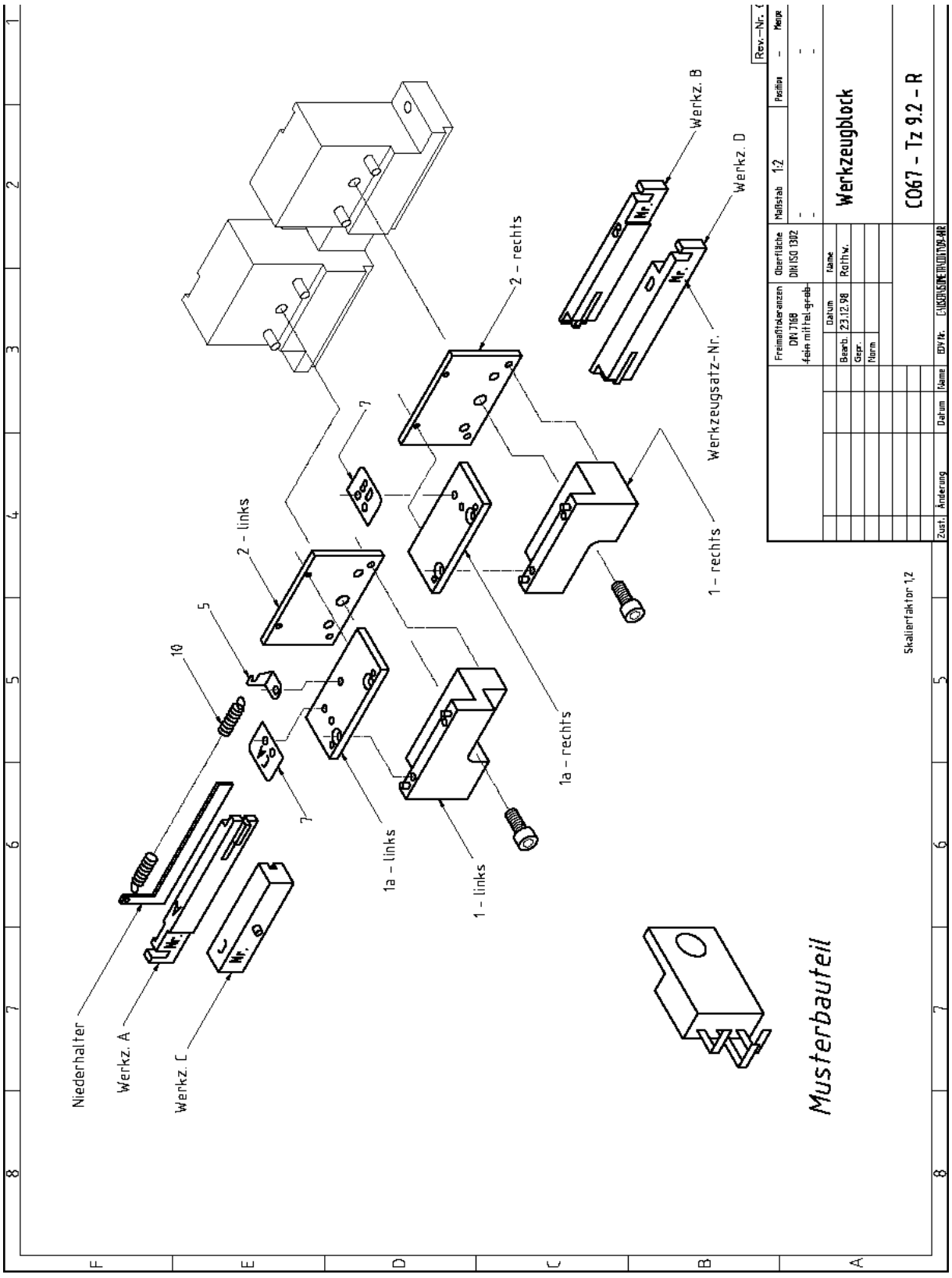
Niederhalter
Werkz. A
Werkz. C
Werkz. B
Werkz. D
Werkzeugsatz-Nr.
1 - rechts
1a - rechts
2 - rechts
2 - links
1a - links
1 - links
10
5
7
Musterbauteil
Skalierfaktor 1:2
Werkzeugblock
C067 - Tz 9.2 - R