Cutting and bending machine

Type C068

Translation of the original operating manual

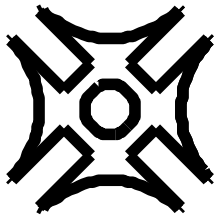

Burst & Zick GmbH

Reservation of ownership

We reserve all rights for this document.
It may not be duplicated nor made accessible to third parties
without our express permission.
This documentation and the information contained therein
Were compiled with due diligence.

However Burst & Zick GmbH does not provide any guarantee
for printing and other errors or the resulting damages.

Version: 3.6

As of: December 2021

Author: Burst & Zick GmbH
Vorrichtungsbau
An der Rossweid 8
D – 76229 Karlsruhe
Tel. +49 721/61 17 75
Fax. +49 721/61 53 92

Burst & Zick GmbH
Vorrichtungsbau
An der Rossweid 8
D – 76229 Karlsruhe
Tel. +49 721/61 17 75
Fax. +49 721/61 53 92
E-Mail: kontakt@burst-zick.com
Internet: www.burst-und-zick.de

EC Declaration of Conformity
In according to EC Machinery Directive 2006/42/EC
Appendix II A

We herewith declare that the machine described hereinafter satisfies the essential safety and health requirements set out in the EC Machinery Directive with regard to its design and construction as well as the type marketed by us.

In case of an alteration of the machine without our agreement this declaration shall become void.

We furthermore point out that for the installation of spare parts only original parts of the company Burst & Zick GmbH may be used.

Description of the machine:	**Cutting, and bending machine**
Machine type:	**C068**
Machine number:	
Applicable directives:	EC Machinery Directive (2006/42/EG appendix II A) EC Low Voltage Directive (2014/35/EG); EC Electromagnetic Compatibility Directive (2014/30/EG)
Applied harmonized standards, particularly:	EN ISO 12100:2010 DIN EN 13857 DIN EN 60204-1 DIN EN 61000-6-1 DIN EN 61000-6-3 DIN EN 14070 was pulled up informatively
Attachment of the CE label:	**CE**
Place/Date/Signature:	Karlsruhe, den 21.12.2021

Managing director

General

1. Notes on industrial safety

The following notes on industrial safety have to be specially adhered to:

- The cutting, forming and bending machine C068 has been constructed according to the current state of the art and conforms to the ESD regulations. Nevertheless, perils may arise from this machine if it is used by untrained personnel or for other than the intended purposes.

- **Statement on the residual risk**

  1. Danger of electric shock if the switchbox is opened while voltage-carrying. Work in and on the electrical equipment may principally only be carried out by qualified electricians.
  2. Danger of contusion and shearing during setup operation.
  3. The electric motor can reach an operating temperature of more than 60°C/140°F.

  The danger areas are marked with signs.





- Applicable accident prevention regulations have to be adhered to by the user, particularly the

  - DGUV Regulation 1

- The machine may only be operated by trained personnel.

- Any mode of operation which can impair the safety of the machine has to be refrained from.

- The user undertakes to operate the machine only in perfect condition.

- Unauthorized alterations or variations which impair safety have to be refrained from.

- Safety devices may principally not be dismantled or put out of operation. If it is indispensable to dismantle safety devices for the purpose of tool changes or for maintenance and repair work, the safety device has to be reinstalled immediately afterwards.

2. Table of contents

Page

General 4
1. Notes on industrial safety 4
2. Table of contents 5
3. General Description 6
4. Specification 8
5. Technical Data 9

Commissioning 10
1. Installation 10
2. Electric Connection 10
3. Working with the machine 11
3.1 Turn on the machine 11
4. Insertion of Stacking magazines (Sticks) 12

Retool 13
1. Principle comment to the adjustments from the machine 13
2. Tool change 14
2.1 Tool change with a tool for a TO 220 component 14
2.2 Tool change with a tool for a component greater than 15 mm 16
3. Machine adjustments 18
3.1 Forming-Depth Adjustment without digital display 18
4. Basic adjustment of the machine 20
5. Change magazine shaft 21

Faults and their rectification 22

Maintenance 23
1. Maintenance Plan 23

Technical Documents 24
1. Circuit plan C068 24
2. Parts and recommend parts list C068 electrical pieces 26
3. Recommend parts (mechanical parts) 27

3. General Description

The cutting and bending machine C068 is particularly build for the processing of power transistors of the designs TO126, TO128 and T.220 with three or more radial performed connecting wires.
The transistors are fed exclusively on stack magazines (sticks). Similarly, the decrease in the machined components, that means the ejected components are automatically sorted into the back rod magazines.
If a component is jammed it is possible via the "forward backward" switch to run the drive backwards and thus to solve the jammed part of the machine the machine.
The tool sets are replaceable, resulting in a variety of possible forms results.
The feed magazines and the bending and stamping molds of tools are component specific and are manufactured to customer specifications and patterns

Options:

Digital display

Operational sequence:

The shaping of the connecting wires as well as bending and cutting is carried out in a single operation. During processing, the connection wires are clamped to avoid impermissible tensile loads on the component body.



Fig. 1

Cutting – and bending machine C068

4. Specification

1. The bending of the components can be done only of the right side (seen from the operator side). The magazine has to be adapted to the desired component shape.
2. At multipart beadings, for example “Zick-Zack Welle” there only can be bend two connecting wires.

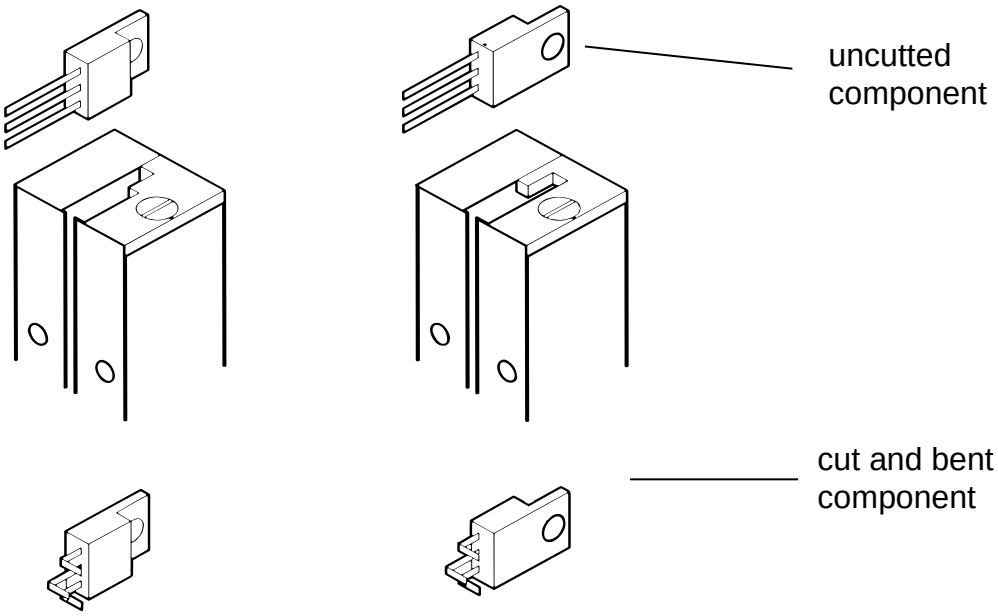

Figure 2

Component forms

5. Technical Data

Dimensions	width: depth: height:	360 mm 450 mm 560 mm
weight:		Ap. 34 kg
Connection:		230 V / 50 Hz or 115V /50-60Hz Look at the label !!!!!!
Wire Ø		Every power transistor wire dimension

Commissioning

1. Installation

The machine is delivered fully assembled and installed. Please check the shipment immediately with the help of the delivery note and/or the packing list. In case the consignment is incomplete or if damages have occurred during transport, please inform us immediately.

Place the machine on a stable, level working table.

2. Electric Connection

Connect power cable with 230V / 50 Hz or 115V 50/60 Hz socket. Look at the label witch Voltage you need.



3. Working with the machine

3.1 Turn on the machine

1. Close protection cover (for safety reasons the machine can only be started with closed protection cover).
2. Actuate power switch.
3. Set direction switch to forward.
4. Push star button.
5. On potentiometer increase the speed gradually until the desired number of cycles is reached. Normally 100%.
6. To stop the machine push sop button and turn potentiometer to zero.

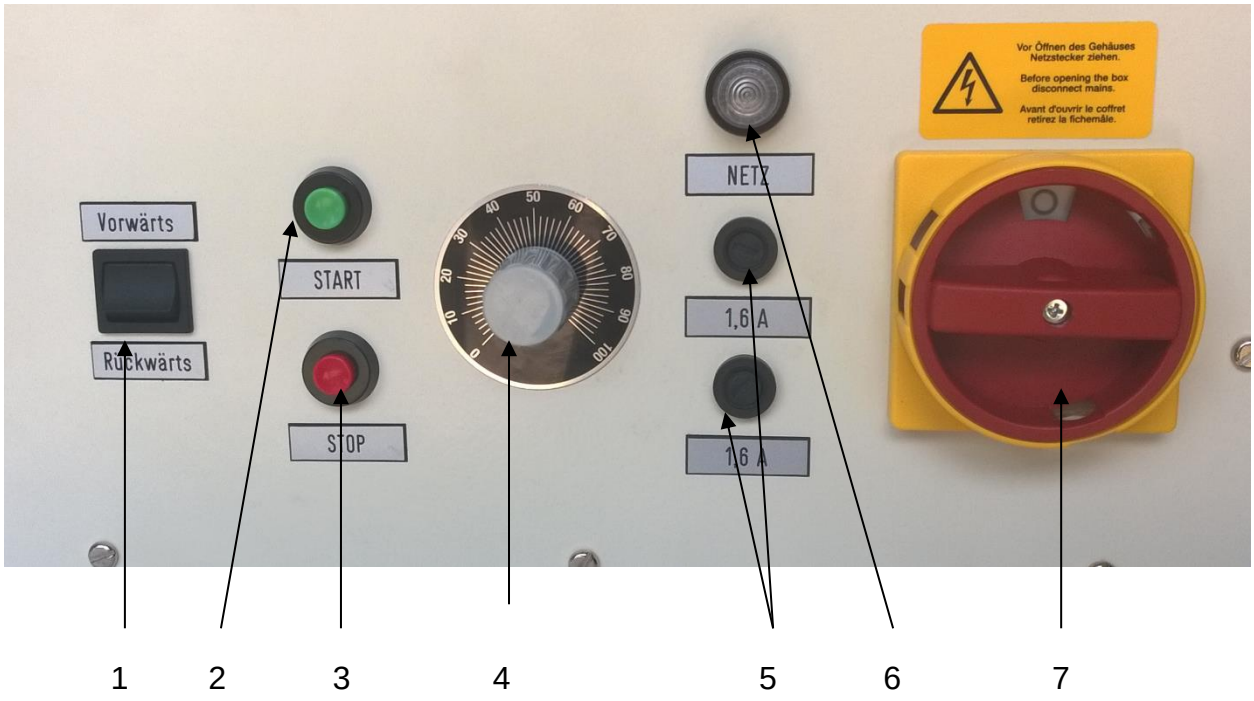

1. Direction switch
2. Start button
3. Stop button
4. Speed potentiometer
5. Power light
6. Fuses
7. Main switch

Figure 3

Control panel

4. Insertion of Stacking magazines (Sticks)

Supply:

Insert a full tube - the connecting leads downwards - into the upper clamp as shown in figure 4.

Remove:

insert an empty stick into the lower clamp.

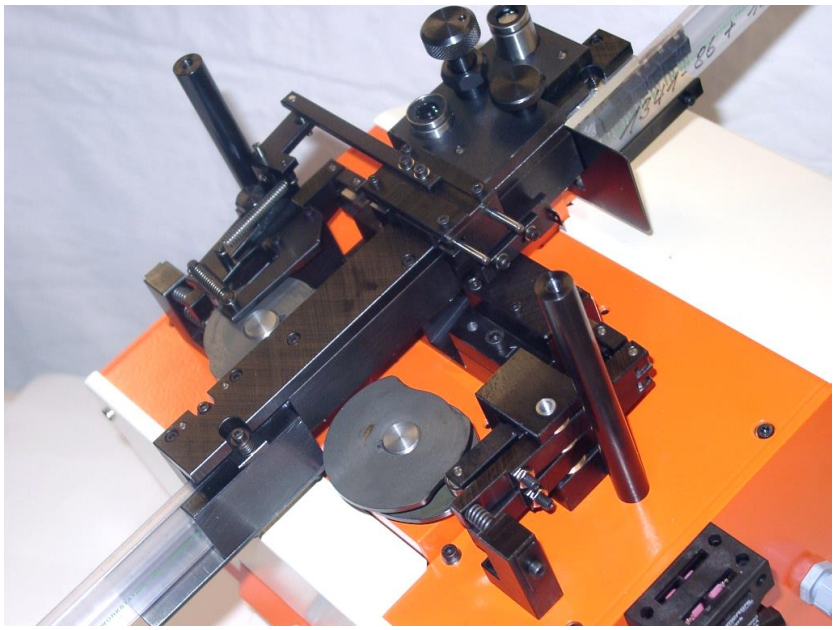

Figure 4

insertion of pile magazines (Sticks)

Use machine only when the protecting cover is closed





Retool

1. Principle comment to the adjustments from the machine

- The machine becomes factory-provided for a specific construction unit form which can be processed - if this is customer desired -. In order to exclude damage, later changes of attitude must be accomplished carefully on the basis available instruction.
- Changes at the tools are to be co-ordinated absolutely with the manufacturer, so that no damages during the operation develop.
- Secure the machine while retool or doing maintenance work, thus no unintentional (unauthorized) main connection can take place.
- Turn main switch to off and pull out the power plug.
- After every adjustment drive the machine one production cycle very slowly.
- With all attitudes you accomplish at the machine absolutely be aware that all solved screws and nuts/mothers are tightened firmly again before you start a new processing, even if this is not expressly mentioned in the following text
- Continue to note that each belt extends something after a certain time. Examine therefore the individual belt drives and retighten these if this should be necessary.





2. Tool change

2.1 Tool change with a tool for a TO 220 component

1. Move apart the tools, that means drive them to end position.
2. Pull out the power supply plug.
3. Take off the plexiglass protection cover.
4. Remove magazine upeards.
5. Unlock the tools. (collapse the tappet (Fold driver up. (Fig. 5 item 1).
6. Remove the two fixing screws (Fig. 5 item 2) .and take off the tool holder.
7. Take off the tool-kits.
8. When inserting the new tool-kits you should pay attention to the following points.
   - Each tool kit consists of 4 inserted pieces
   - Now order to avoid an exchanging among themselves, each part of a tool kit is marked by the same two digit number. This number informs you about the form of the tool. This is Importantly when ordering of spare tools.
   - Tool holders and tool kits are marked by the letters A - D.
     When inserting, absolutely take care that these markings agree.
   - Always insert the tools C (left tool) and D (right tool) first.





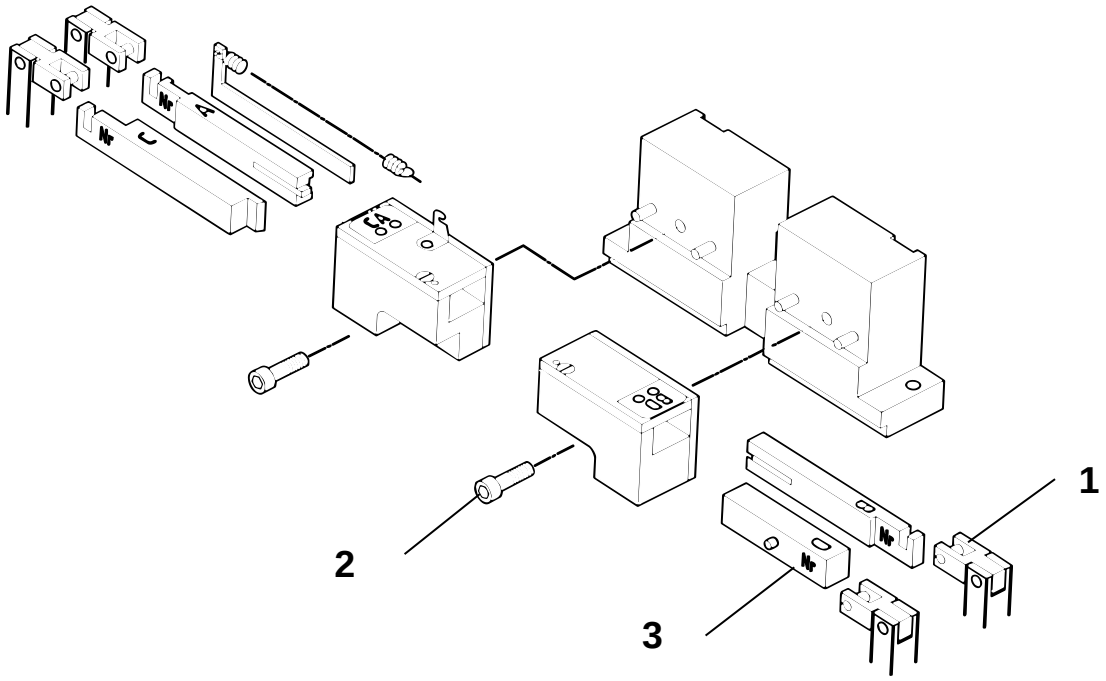

Figure 5

Tool change

1. Tapped tool drive
2. Fixing screws
3. Tool kit number

9. Insert tool holder into the automat and fasten with 1 Cyl-Screw each. Pay attention to cleanliness of the bearing surfaces!
10. Install plexiglass protection cover.
11. Drive maschine slowly one production cycle.

2.2 Tool change with a tool for a component greater than 15 mm

1. Move aprt the tools, thah means drive them to end position
2. Pull out the power supply plug.
3. Take off the plexiglass protection cover.
4. Remove magazine upwards.
5. Unlock the tools. (collapse the tappet (Fold driver up. (Fig. 6 item 1)
6. Remove the two fixing screws Fig. 6 item 2) and take off the tool holder.
7. Unscrew the set screw Fig. 6 item 4)lon the raer of the holder.
8. First take out the filler, than the tool and at last the clamping die.
9. When inserting the new tool-kits you should pay attention to the following points.
   - Each tool kit consists of 4 inserted pieces
   - In order to avoid an exchanging among themselves, each part of a tool kit is marked by the same two digit number. This number informs you about the form of the tool. This is Importantly when ordering of spare tools.
   - Tool holders and tool kits are marked by the letters A - D.
     When inserting, absolutely take care that these markings agree.
   - Always insert the tools C (left tool) and D (right tool) first.





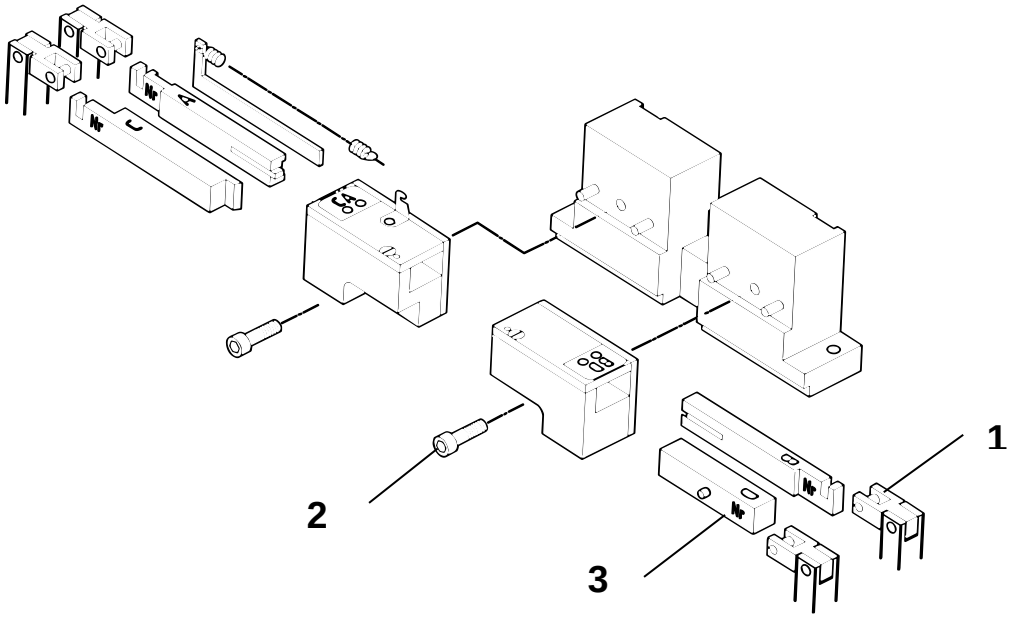

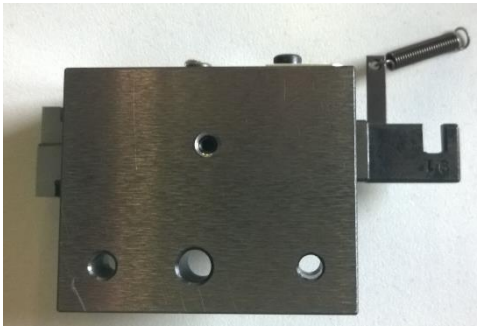

Figure 6

Tool change

1. Tapped tool drive
2. Fixing screws
3. Tool kit number
4. Set screw

12. Insert tool holder into the automat and fasten with 1 Cyl-Screw each. Pay attention to cleanliness of the bearing surfaces!
13. Install plexiglass protection hood again.
14. Turn trough at least 1 clock slowly.

3. Machine adjustments

3.1 Forming-Depth Adjustment without digital display

Remove the lock nut (1) and adjust the measure of "X" between lower edge construction unit and the bend of the construction unit lead with the spindle (2).
With tools with smooth cut, the lead length is adjusted here.

turn in the clockwise direction	⇨	spacer measure increases
turn against the clockwise direction	⇨	spacer measure decreases
1 whole rotation	=	1 mm

Tip: For fine adjustment process and measure some Components. Correct the final Adjustment with this information.

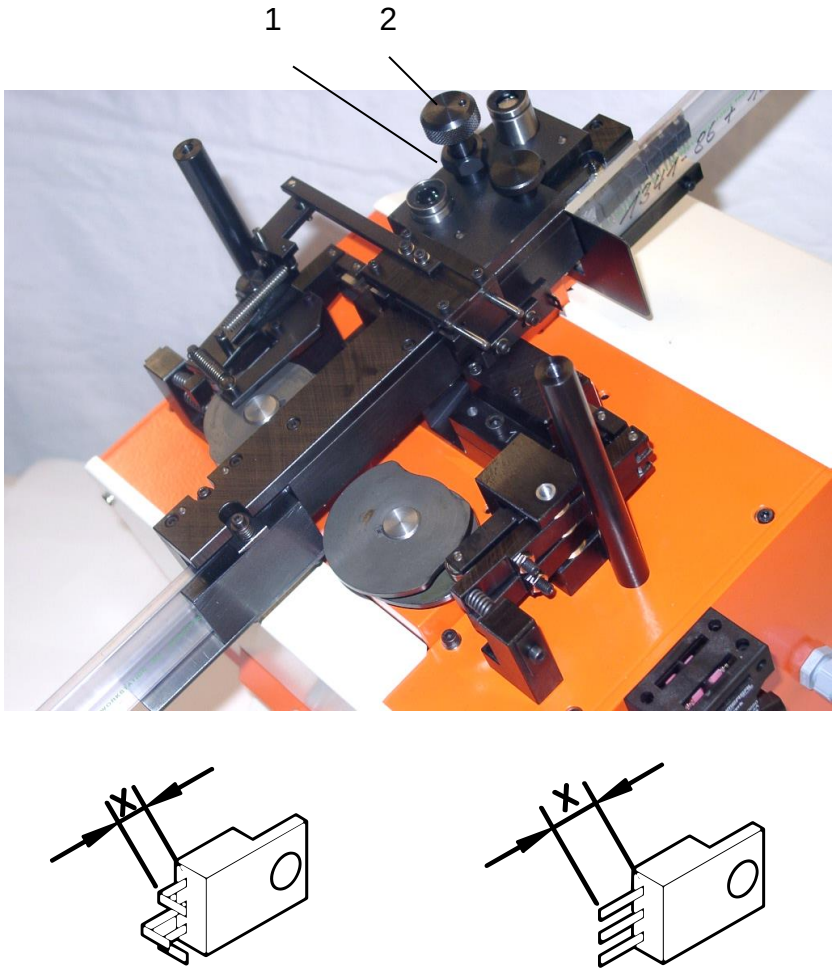

Figure 7
Adjusting the bending length

3.2 Forming-Depth Adjustment with digital display (option)

Set display on channel 1. Remove the lock nut (1) and adjust the measure of "X" between lower edge construction unit and the bend of the construction unit lead with the spindle (2).
With tools with smooth cut, the lead length is adjusted here.

turn in the clockwise direction	⇨	spacer measure increases
turn against the clockwise direction	⇨	spacer measure decreases
1 whole rotation	=	1 mm

The mesuare „X“ you can read at the digital display (3).

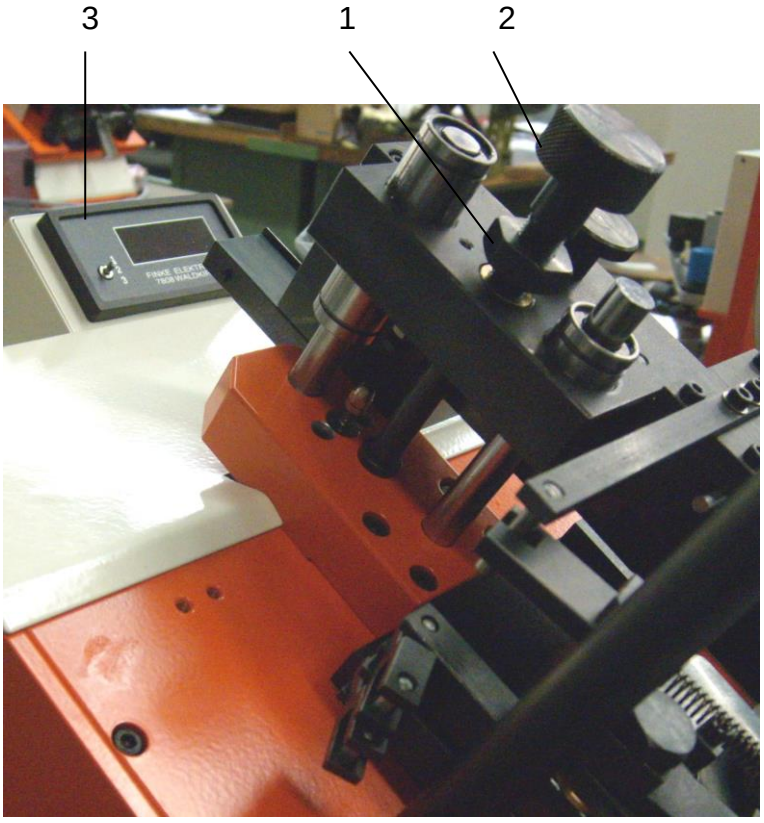

Figure 8
Adjusting the bending length

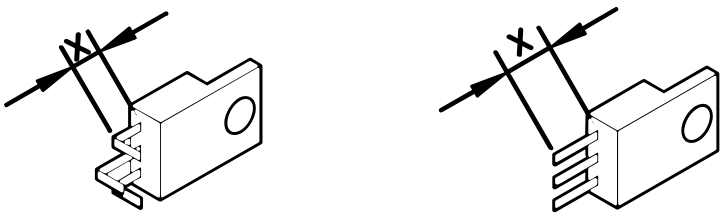

4. Basic adjustment of the machine

If the funktion of the maschine is not correct the control-curve must be adjustet. Take for this to assist in the understanding the compilation design Tz 4 of the spare parts catalog to assistance. Around the function of the machine to adjusting must the two grubscrews of the toothed belt wheel Tz.4 T. 5 be loosened. Now the control-curve can be adjusted to eauch other. At picture 9 you can see the control-curves standing in the right position to each other. If the position is correctly bolt on the grubscrews. Switch on the mashine and slowly run leave.Control the funktion of the mashine and if it is not correctly reajust the control-curves.

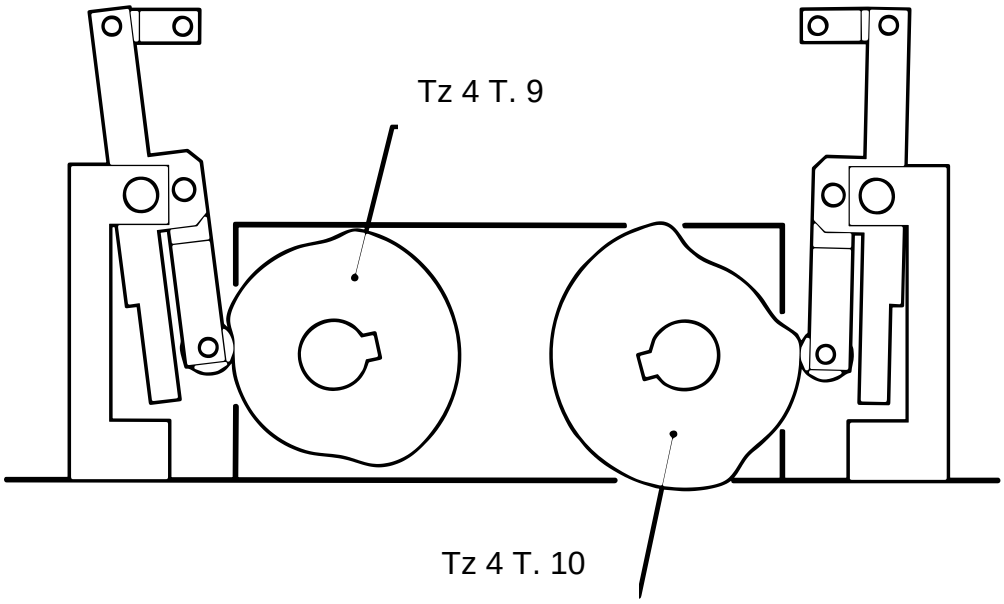

Figure 9

Position of the cam pair to each other

5. Change magazine shaft

1. pull out the power supply plug.
2. take off the plexiglass protection hood.
3. remove the magazin shaft to the top.
4. remove thumbsrew (1) and take off the magazine support (2).
5. remove the seven screws (3) and take off the separation (4).
6. remove the magazine (5) and feeder (6). Change-magazine and change-feeder set up at the same place and fasten with screws (3).

   Important!

   To avoid mixing up with each other the magazine and feeder is marked with the same red number.
7. mount all removed parts (4, 2) in reverse order.
8. Reattach the magazine shaft on machine.
9. Install plexiglass protection hood again.
10. Turn trough at least 1 clock slowly.

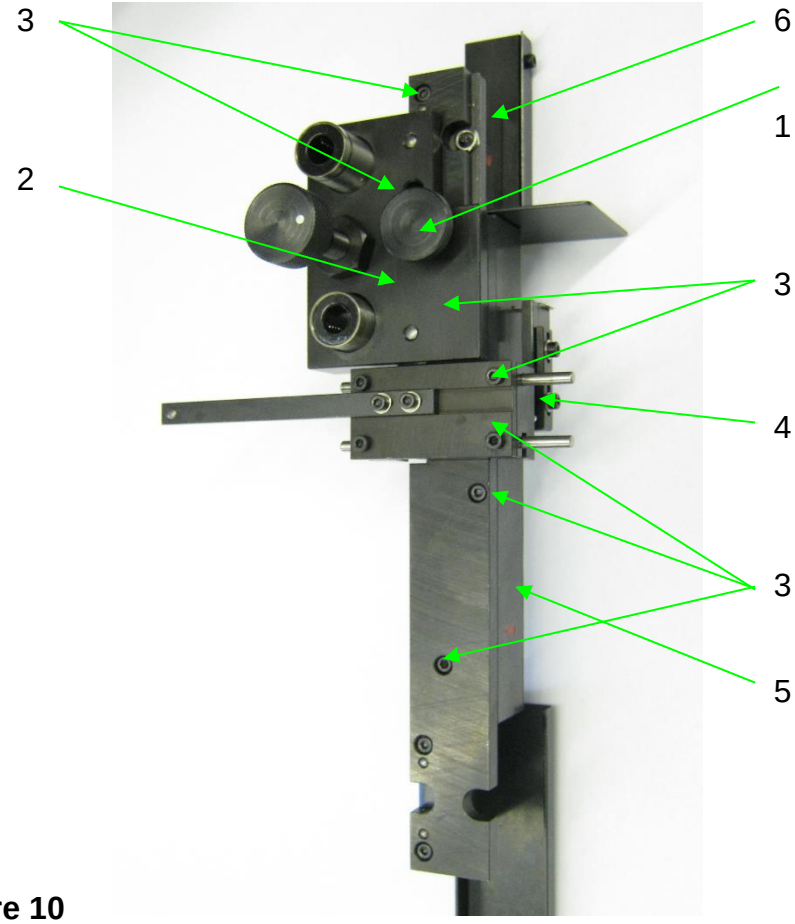

Figure 10

Magazin shaft

Faults and their rectification

Caution: **All maintenance and repair work may only be performed by qualified and trained personnel!**



At appropiate handling the device works almost troublefree.
If any disturbances should arise first inform your supplier.

Your Contact: Company **Burst & Zick GmbH Tel. +49 (0)721 / 611775**

The type of defect first will be discussed. The Result should be held in a protocol (see table below). The Informations should be like this: Malfunctions, Causes, actions for corrections of deficiencies.

Malfunctions	Causes	Actions

Maintenance

1. Maintenance Plan

	Interval				Task
	d	w	m	y	
Machine, general	X				Vacuum-clean or clean from wire clippings and other remains with a brush.
Tools		X			Check bending and cutting tools for tin deposits and remove these, if necessary, without damaging the tools.
All sliding parts conveyor graspers etc.		X			Clean and lubricate slightly with oil. **No grease**
Belt (it is under the tools inside the mashine)			X		Check tension. Tighten belt if necessary.
Electrical check			X	X	To note local provisions as in Germany DGUV Regulation 3

d = daily
w = weekly
m = monthly
y = annualy

Caution: All maintenance and repair work may only be performed by trained specialists!

Caution: No grease may be used for lubricating moving and sliding parts. Use thin lubricants only.





Technical Documents

1. Circuit plan C068

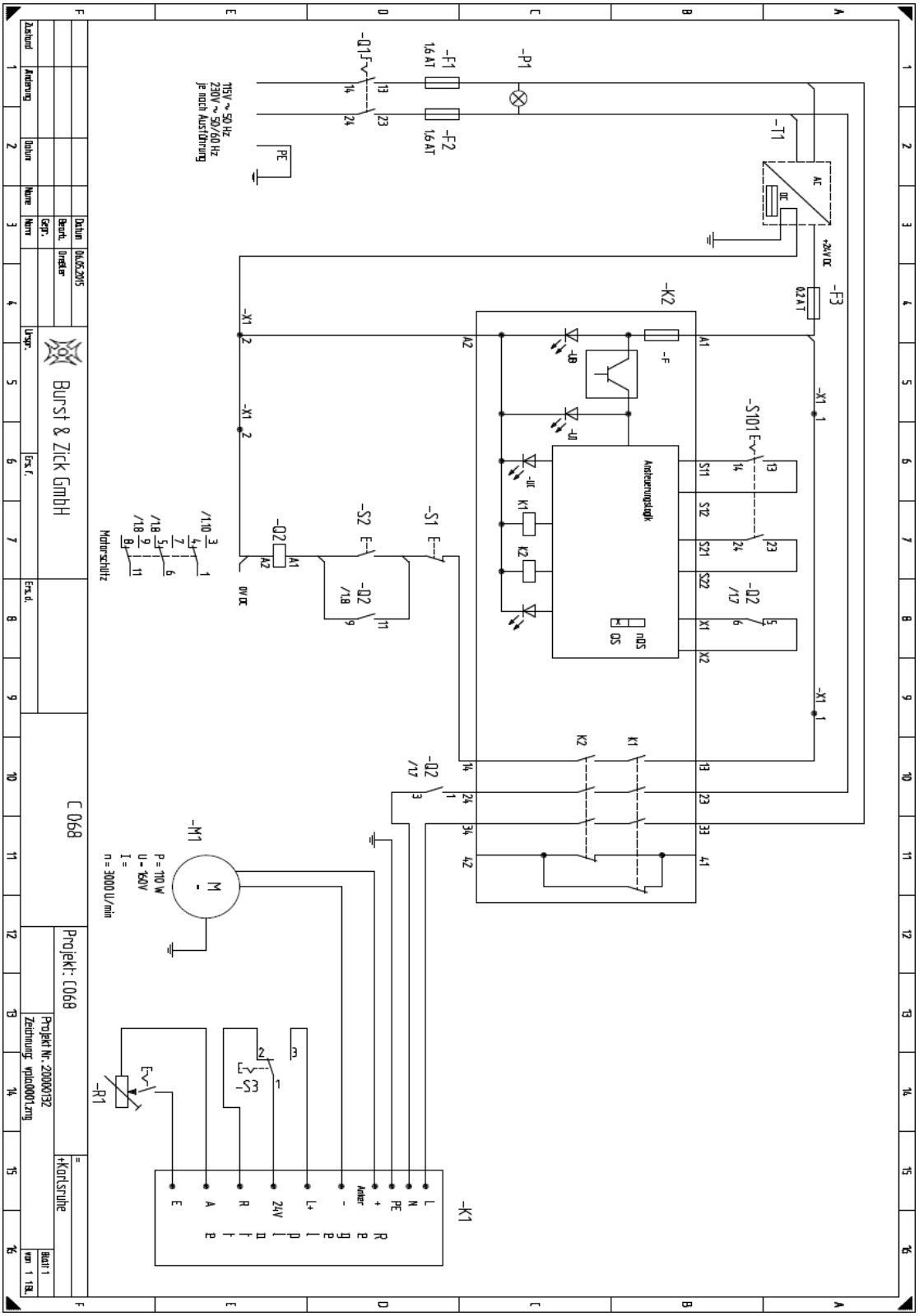

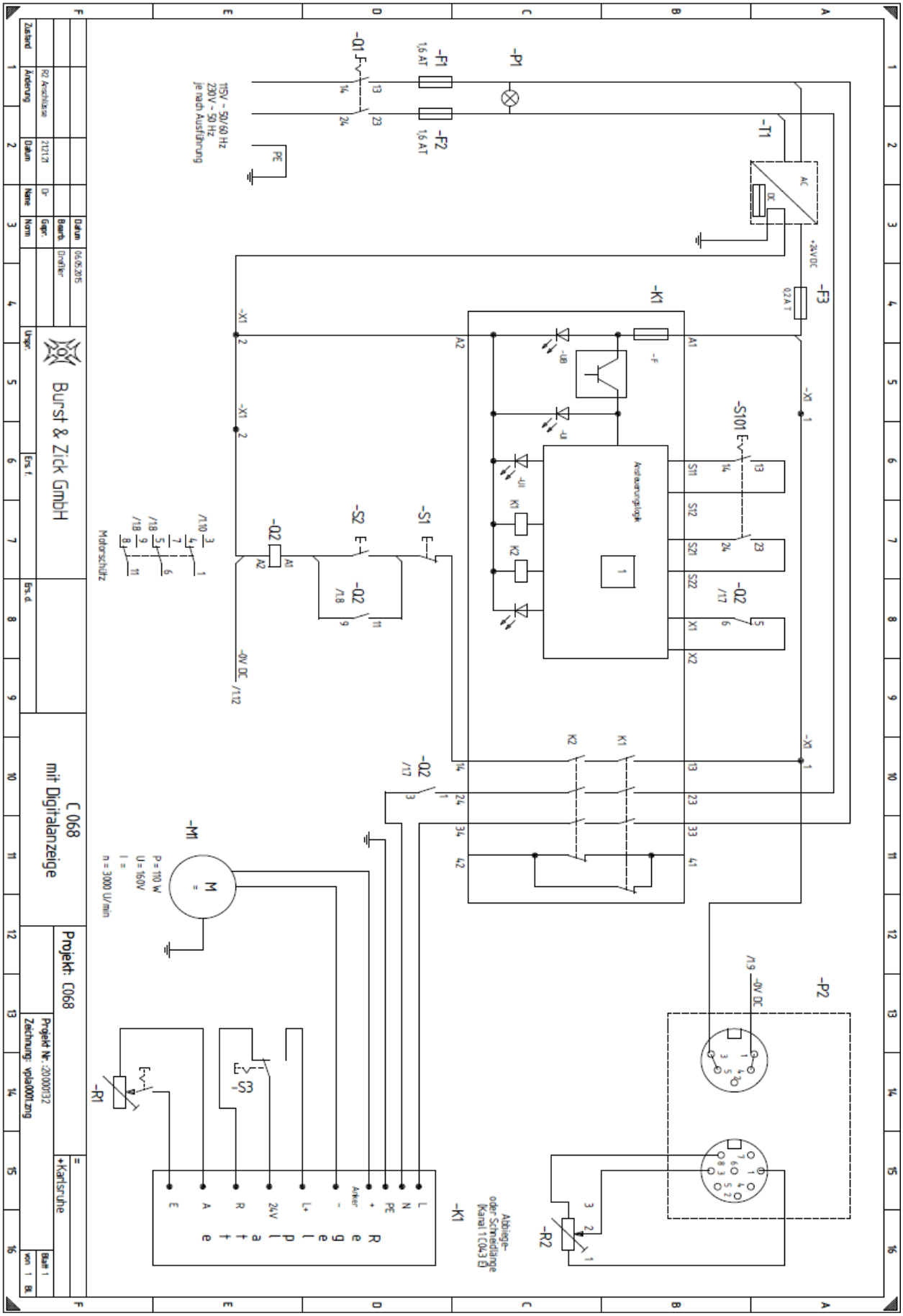
Burst & Zick GmbH
C 068
mit Digitalanzeige
Projekt: C068
Projekt Nr.: :20000132
Zeichnung: vpla0001.zng
+Karlsruhe
115V - 50/60 Hz
230V - 50 Hz
je nach Ausführung
-Q1
-F1
1,6 AT
-F2
1,6 AT
-P1
-T1
-F3
0,2 A T
-K1
-S101
Ansteuerungslogik
-Q2
-S1
-S2
-M1
P = 110 W
U = 160V
n = 3000 U/min
-P2
-R1
-S3
-R2
Abbiege-
oder Schneidlänge
(Kanal 1 C043 E)
Regelplatte
Motorschütz

2. Parts and recommend parts list C068 electrical pieces

Name	Type	Order number	Recommended parts
Q1	Main switch	CA10 T302/D-A004 EG	
F1,F2	Fuse holder FEF Locking device Fuse 1,6AT Cap	0031.1085 0696.0033 419-993 0859.0042	10 pieces
F3	Fuse holder Fuse 0,2 AT	UK 5 HESI 5x20mm	1 piece
P1	Lamp socket Lamp 230V Cap	1.60502.1020214 578-367 5.52011.026	
T1	Power supply	STEP-PS/1AC/24VDC/0,5	
Q2	Relais Relais socket	60.13.9.0024.0070 90.03	
K2	Safety relay	SRB-E-301MC	
X1	Terminal blocks	WDK 2,5	
K1	Motor control board with reversing of rotation 115V or 230 V depending on the version of the machine. Please specify when ordering necessarily.	901/00047	
R2	Potentiometer 470 KOhm	CIP20C-KS-IL-LIN 470K	1 piece
S1	Push button red	101001011/0301	
S2	Push button green	101001001/0507	
S101	Safety switch Actuator	AZ 16-02 zvrk AZ 15/16 B1	
M1	Direct current motor	PM 1 85-40 160V Gear VE31-GR5-i=55:1 or PM 1 85-40 160V Gear VE31-GR5-i=38:1	
P2	Digital display	DVM 2	
R2	Weggeber	MM 15 1K +-10% L +- 0,5 %	

3. Recommend parts (mechanical parts)

Recommended order	Description	Order No.
1 set	pressure spring - drive lever (4 pieces)	D 180 D
1 set	Curves (5 pieces)	Tz.4 - T.7 to Tz.4 - T.11
1 piece	needle bearing for belt tightener	NK 8 -16
1 piece	Plexiglas hood	Tz.8 - T. 12
1 piece	toothed belt	T 5 / 330
1 piece	tension spring for holddown plate	14 776
1 piece	tension spring for isolation	16 528

Spare parts list - Catalogue

Table of contents

Base ..... Tz 1
Housing..... Tz 2
Drive ..... Tz 3
Drive - curve mounting..... Tz 4
Drive - lever mounting..... Tz 5
Magazin holder…….. Tz 6
Tool holder ..... Tz 7
Protection cover…… Tz 8
Magazine ……... Tz 9

Tz 1 - Base

Pos.	Pieces	Drawing no.	Description	Note
1	1	C068 Tz 1T. 1	Base plate	
2	1	C068 Tz 1T. 2	Cover plate	
3	1	C068 Tz 1T. 3	Side plate left	
4	1	C068 Tz 1 T. 4	Chassis	
5	1	C068 Tz 1 T. 5	Front plate	
6	1	C068 Tz 1 T. 6	Rear plate	
7	4		Rubber foot	
8	2	GN425-10-235-CR	U-shaped hold	

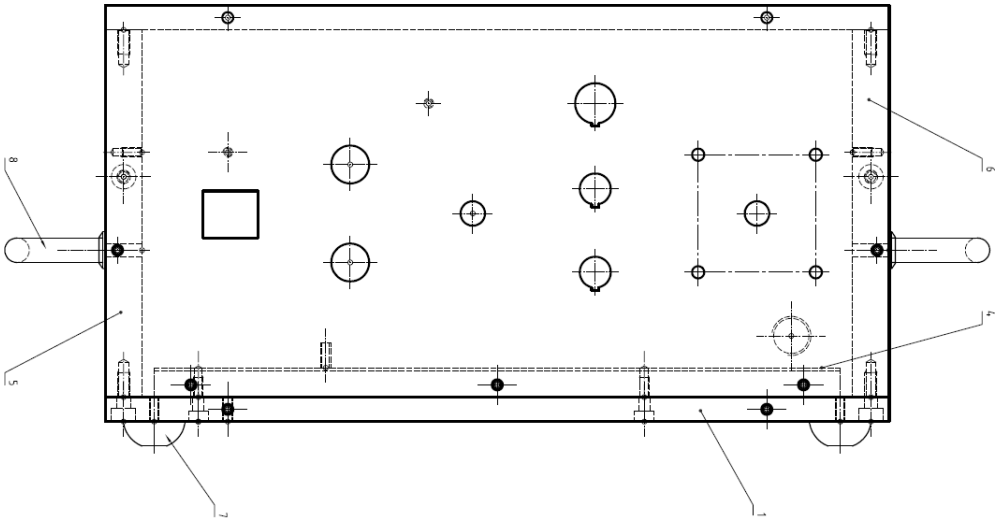
8
6
5
4
7
1

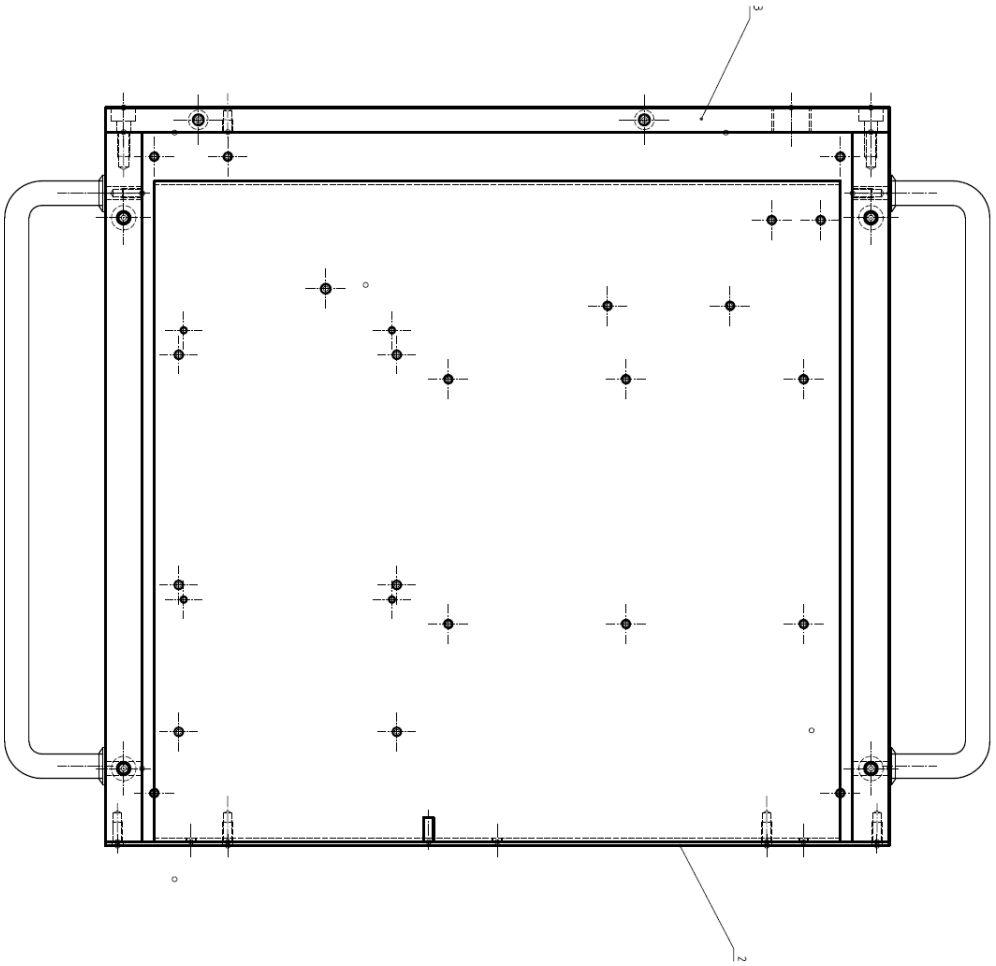
3
2

Tz 2 - Housing

Pos.	Pieces	Drawing no.	Description	Note
1	1	C068 Tz 2 T. 1	Plate	
2	1	C068 Tz 2 T. 2	Side plate right	
2a	1	C068 Tz 2 T. 2A	Side plate left	
3	1	C068 Tz 2 T. 3	Drawer	
4	1	C068 Tz 2 T. 4	Fixing	
5	1	C068 Tz 2 T. 5	Cover plate	
6	1	C068Tz 2 T. 6	Plate	
7	1	C068Tz 2 T. 7	Holder	
8	1	C068Tz 2 T. 8	Bushing bolt	
9	3	C068Tz 2 T. 9	Shaft hardened	
10	1	C068Tz 2 T.10	Shaft hardened	
19	1		Grip 10501-003 154	

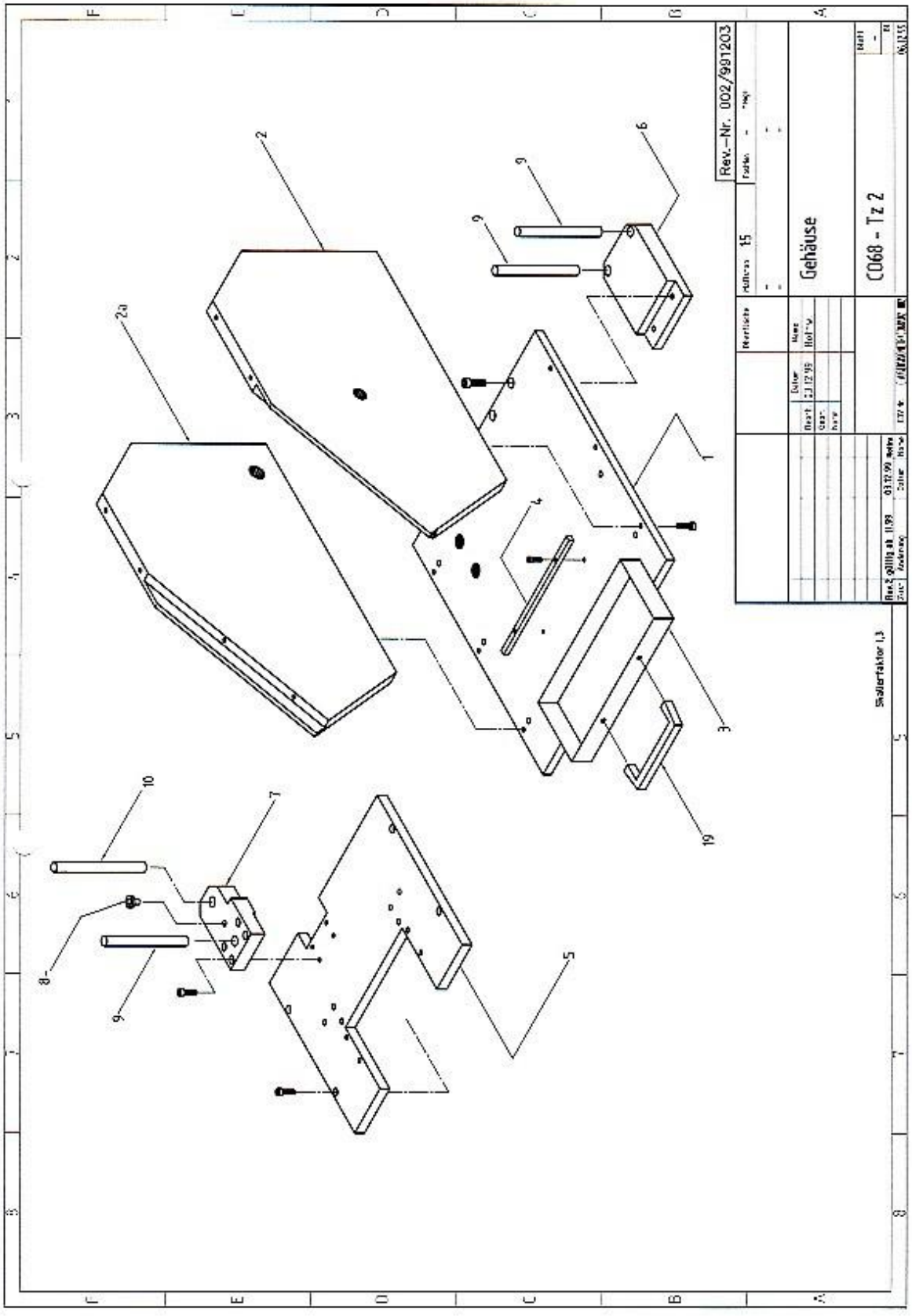
Rev.-Nr. 002/991203
Gehäuse
C068 - Tz 2
Maßstab 1:3

Tz 3 - Drive

Pos.	Pieces	Drawing no.	Description	Note
1	1	C068 Tz 3 T. 1	Toothed wheel	
2	1	C068 Tz 3 T. 2	Engine collar	
3	4	C068 Tz 3 T. 3	Bolt	
4	1	C068 Tz 3 T. 4	Headles screw	
5	1	C068 Tz 3 T. 5	Locking bar	
6	1		Toothed belt, T5-330 lg. 10 mm	
7	1		Needle bearing, NK 8/16	
8	1		Engine	

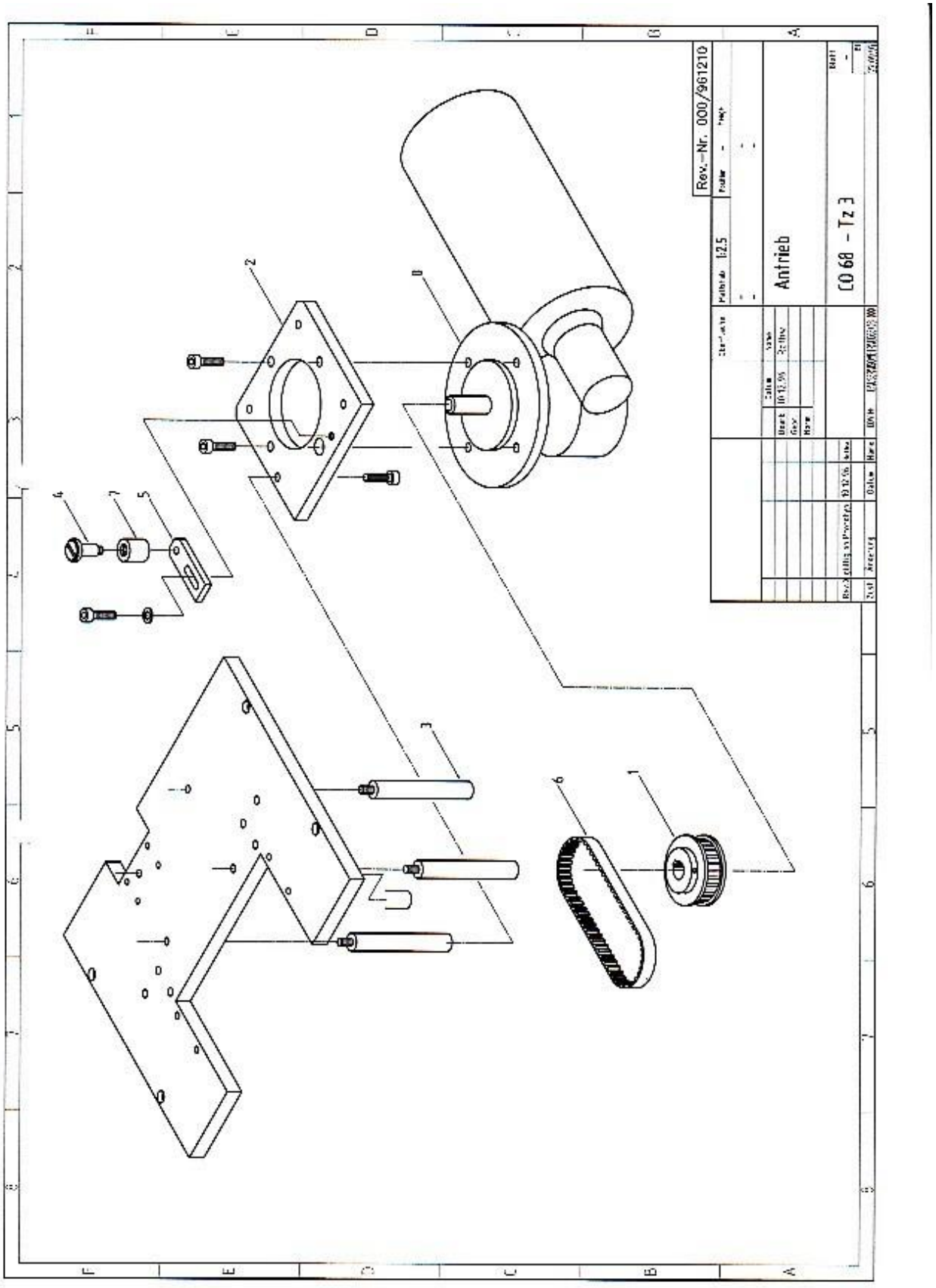
Rev.-Nr. 000/961210
Antrieb
CO 68 - Tz 3

Tz 4 - Drive curve mounting

Pos.	Pieces	Drawing no.	Description	Note
1	1	C068 Tz 4 T. 1	Bearing	
2	1	C068 Tz 4 T. 2	Shaft	
3	1	C068 Tz 4 T. 3	Shaft	
4	2	C068 Tz 4 T. 4	Disk	
5	3	C068 Tz 4 T. 5	Locking bar	
7	1	C068 Tz 4 T. 7	Control curve 1	
8	1	C068 Tz 4 T. 8	Control curve 2	
9	1	C068 Tz 4 T. 9	Control curve 4	
10	1	C068 Tz 4 T. 10	Control curve 3	
11	1	C068 Tz 4 T. 11	Control curve 6	
12	1	C068 Tz 4 T. 12	Toothed belt wheel	
13	1	C068Tz 4 T. 13	Headles screw	
14	1		Toothed belt, T5-330 lg 10 mm wide	
15	4		Groove ball bea-ring, 6003 -2z	
16	1		Needle bearing, NK 8/16	
17	2		Key, A 6 x 6 x 30	
18	1		Key, A 6 x 6 x 20	

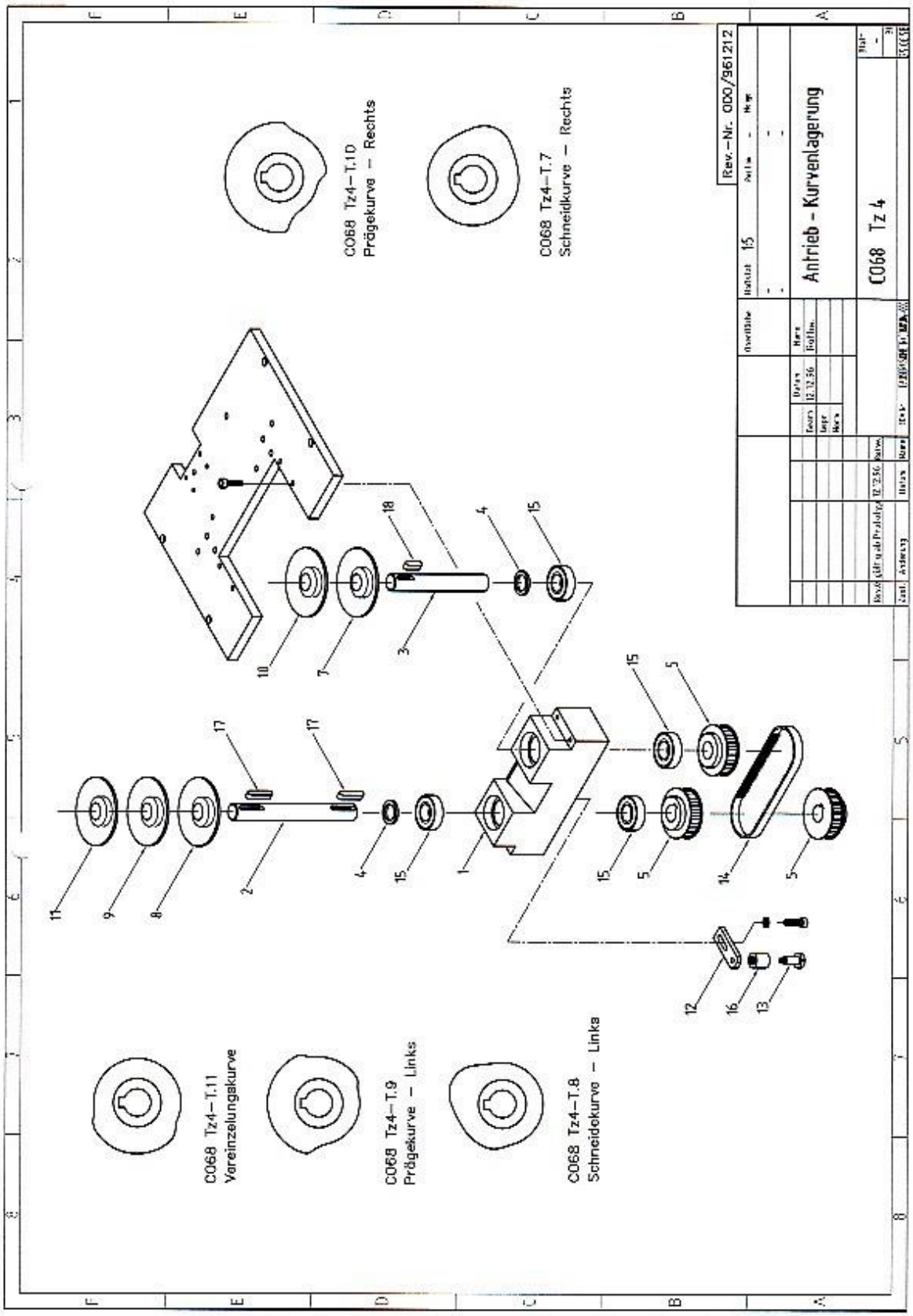
C068 Tz4-T.10
Prägekurve – Rechts
C068 Tz4-T.7
Schneidkurve – Rechts
C068 Tz4-T.11
Vereinzelungskurve
C068 Tz4-T.9
Prägekurve – Links
C068 Tz4-T.8
Schneidekurve – Links
Rev.-Nr. 000/961212
Antrieb - Kurvenlagerung
C068 Tz 4

Tz 5 - Drive lever mounting

Pos.	Pieces	Drawing no.	Description	Note
1	2	C068 Tz 5 T. 1	Clamp	
4	2	C068 Tz 5 T. 4	Bolt	
5	6	C068 Tz 5 T. 5	Disk	
6	1	C068 Tz 5 T. 6	Screw	
7	1	C068 Tz 5 T. 7	Lever	
8	1	C068 Tz 5 T. 8	Holder	
9	1	C068 Tz 5 T. 9	Spring bolt clamp	
10	2	C068 Tz 5 T. 10	Spring bolt	
11	2	C068 Tz 5 T. 11	Spring, Art.-Nr. 16528	
12	1	C068 Tz 5 T. 12	Actuator	
13	1	C068 Tz 5 T. 13	Block	
14	1	C068 Tz 5 T. 14	Spring bolt	
15	1	C068 Tz 5 T. 15	Spring bolt	
16	1	C068 Tz 5 T. 16	Collar	
17	5		Groove ball bearing, 624 - 2z	
19	4	C068 Tz 5 T. 19	Lever	
20	4	C068 Tz 5 T. 20	Lever	
21	4	C068 Tz 5 T. 21	Lever	
22	2	C068 Tz 5 T. 22	Clamp	
23	2	C068 Tz 5 T. 23	Cap	
24	4		Spring 48358	
1	2	C068 Tz 5 T. 1	Clamp	
4	2	C068 Tz 5 T. 4	Bolt	

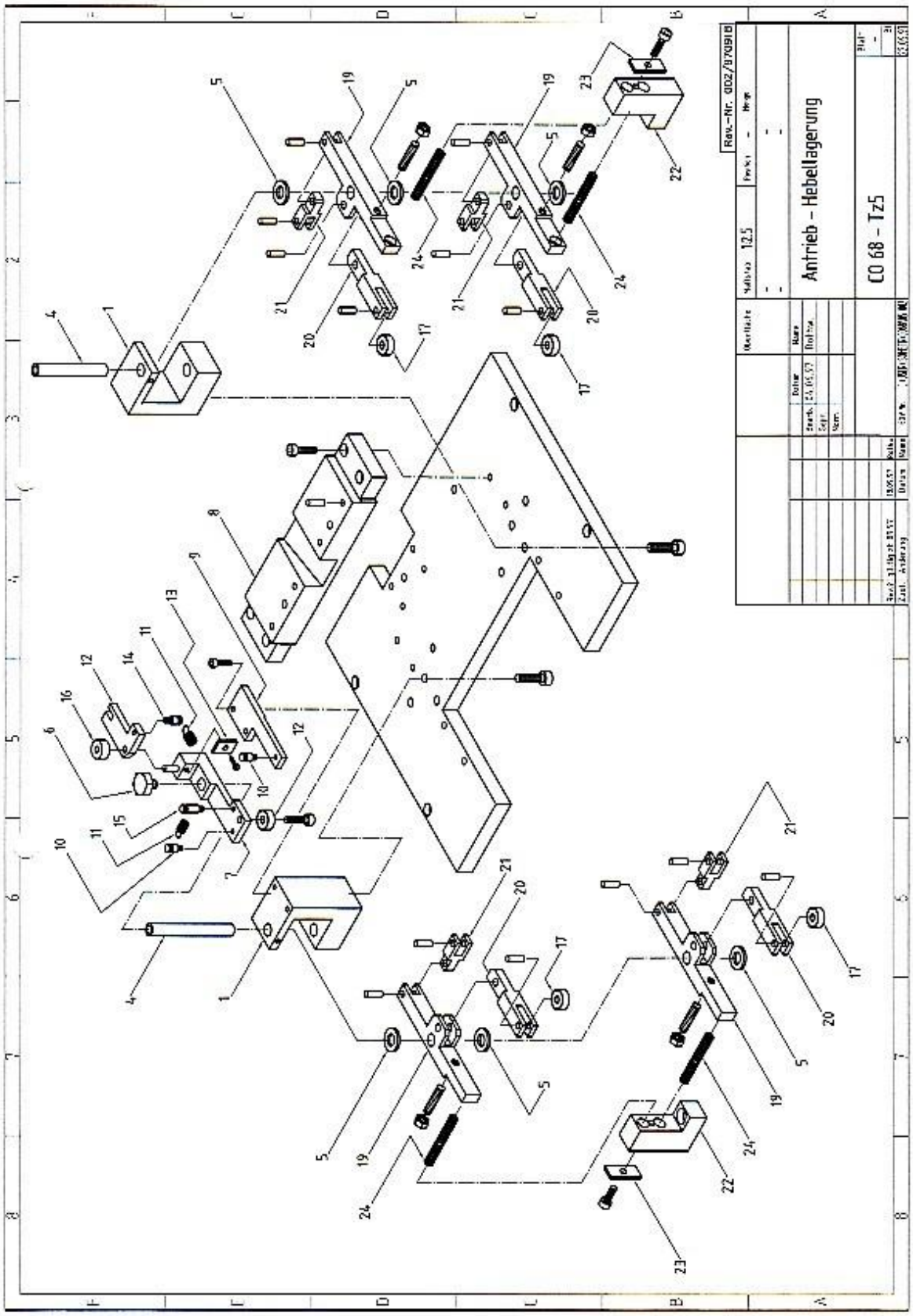
Antrieb – Hebellagerung
CO 68 – Tz5

Tz 6 - Magazin holder

Pos.	Pieces	Drawing no.	Description	Note
1	1	C068 Tz 6 T.1	Magazine holder	
2	1	C068 Tz 6 T.2	Thraded bushing	
3	1	C068 Tz 6 T.3	Adjustment screw	
4	1	C068 Tz 6 T.4	Nut	
5	1		Collar, Ø10DIN 705	
6	2		Linear bushing, N - 10V	
7	1		Knurled screw, M6 x12	
8	1		Dowel pin 4X12	

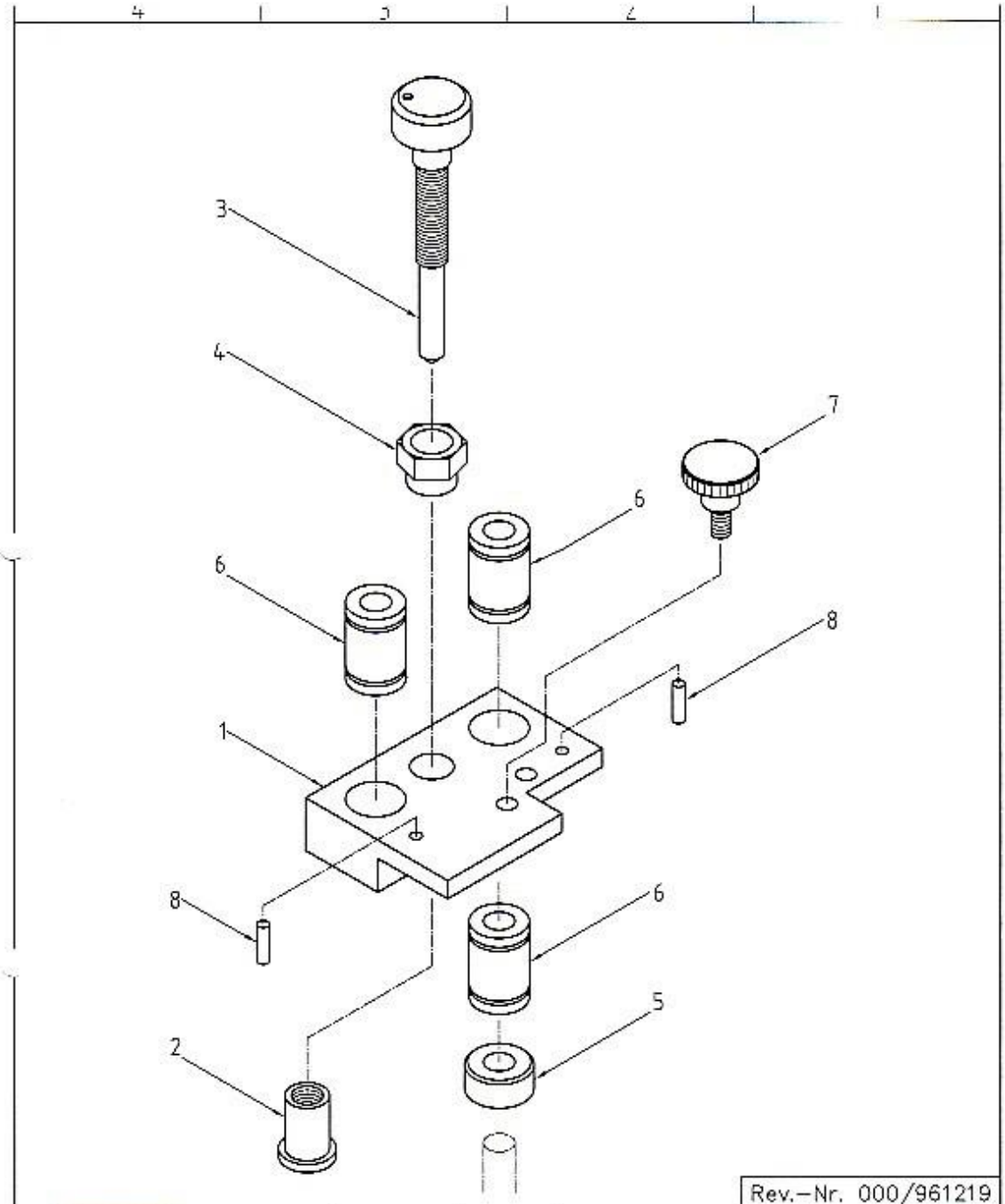

Rev.–Nr. 000/961219

					Oberfläche	Maßstab 1:2	Position – Menge
						-	-
					Datum	Name	
				Bearb.	19.12.96	Rothw.	Magazin - Träger
				Gepr.			
				Norm			
							CO 68 - Tz 6
Rev. 0	ab Prototyp	19.12.97	Rothw.				Blatt -
Zust.	Änderung	Datum	Name	EDV-Nr.	C:\USER\ISOMETRY\CO68\CO6 000		Bl. 29.06.98

Tz 7 - Tool holder

Pos.	Pieces	Drawing no.	Description	Note
1	2	C068 Tz 7 T. 1	Tool holder	
2	2	C068 Tz 7 T. 2	Cap	
5	1	C068 Tz 7 T. 5	Spring bracket	
8	1		Spring, Art.-Nr. 14776	
10	2		Screw, M5 x 20 DIN 912	
11	8		Screw, M3 x 8 DIN 912	
12	4		Countersunk screw, M3 x 6 DIN 7991	
13	1		Screw, M3 x 6 DIN 912	
14	1	C068 Tz 7 T. 14	Set screw	

4	3	2	1

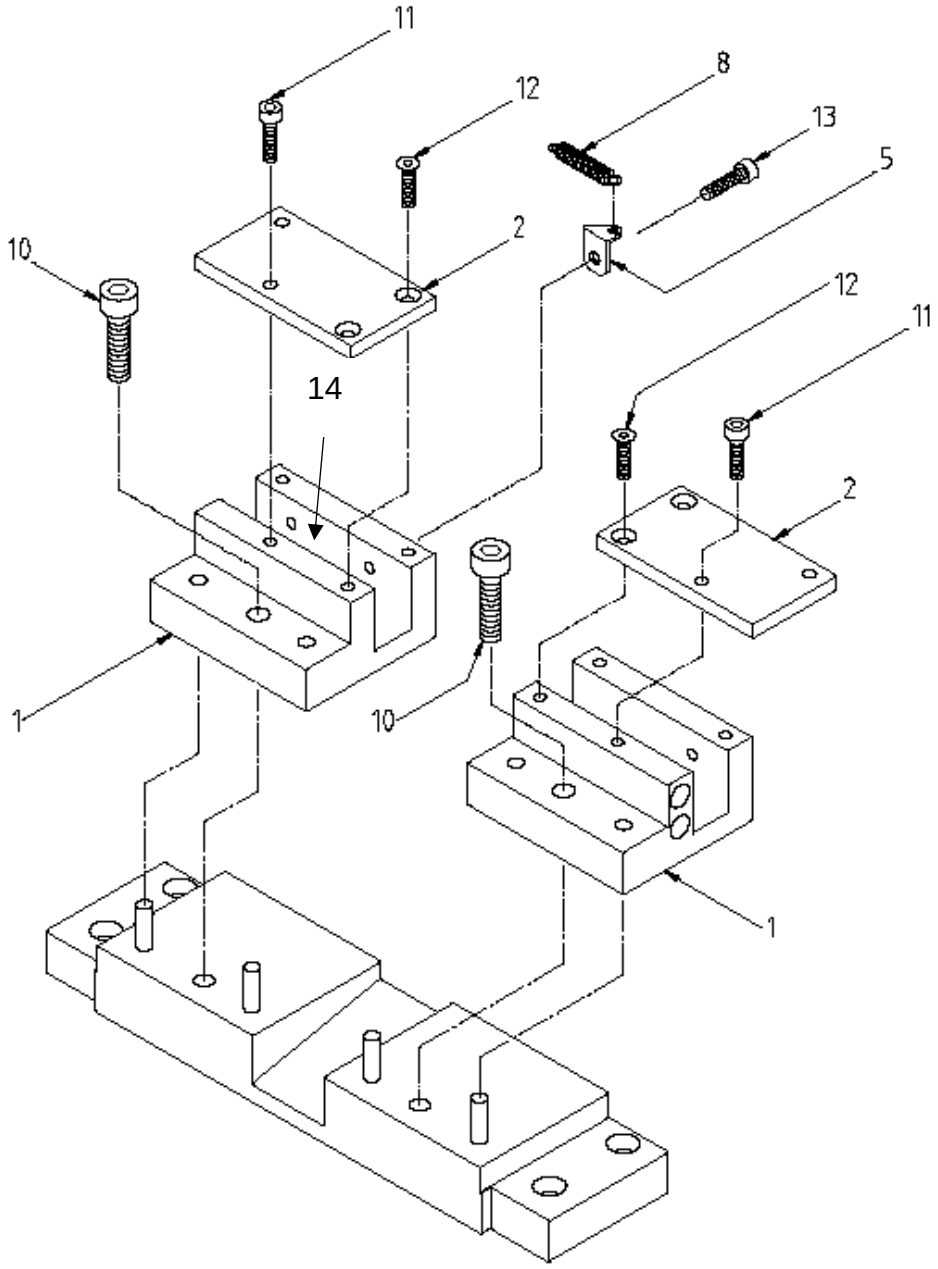

Skalierfaktor 1,1

Rev.-Nr. 001/971126

						Oberfläche	Maßstab 1:2		Position –	Menge
							–		–	
					Datum	Name	Werkzeugträger			
				Bearb.	20.12.96	Rothw.				
				Gepr.						
				Norm						
Rev.1	gültig ab 08.97	18.09.97	Rothw.				CO 68 - Tz 7			Blatt – Bl
Zust.	Änderung	Datum	Name	EDV Nr.	C:\USER\ISOMETR\CO68\97-R01					26.11.97

Tz 8 – Protection cover

Pos.	Pieces	Drawing no.	Description	Note
6	1	C068 Tz 8 T. 8	Cover plate	
7	1	C068 Tz 8 T. 7	Rear plate	
8	1	C068 Tz 8 T. 8	Cover front	
12	1	C068 Tz 8 Tz 12	Protection cover	
13	2	C068 Tz 8 Tz 13	Distance bolt	
14	1	C068 Tz 8 Tz 14	Brack	
30	1		Safety switch, AZ 15/16 zvr	

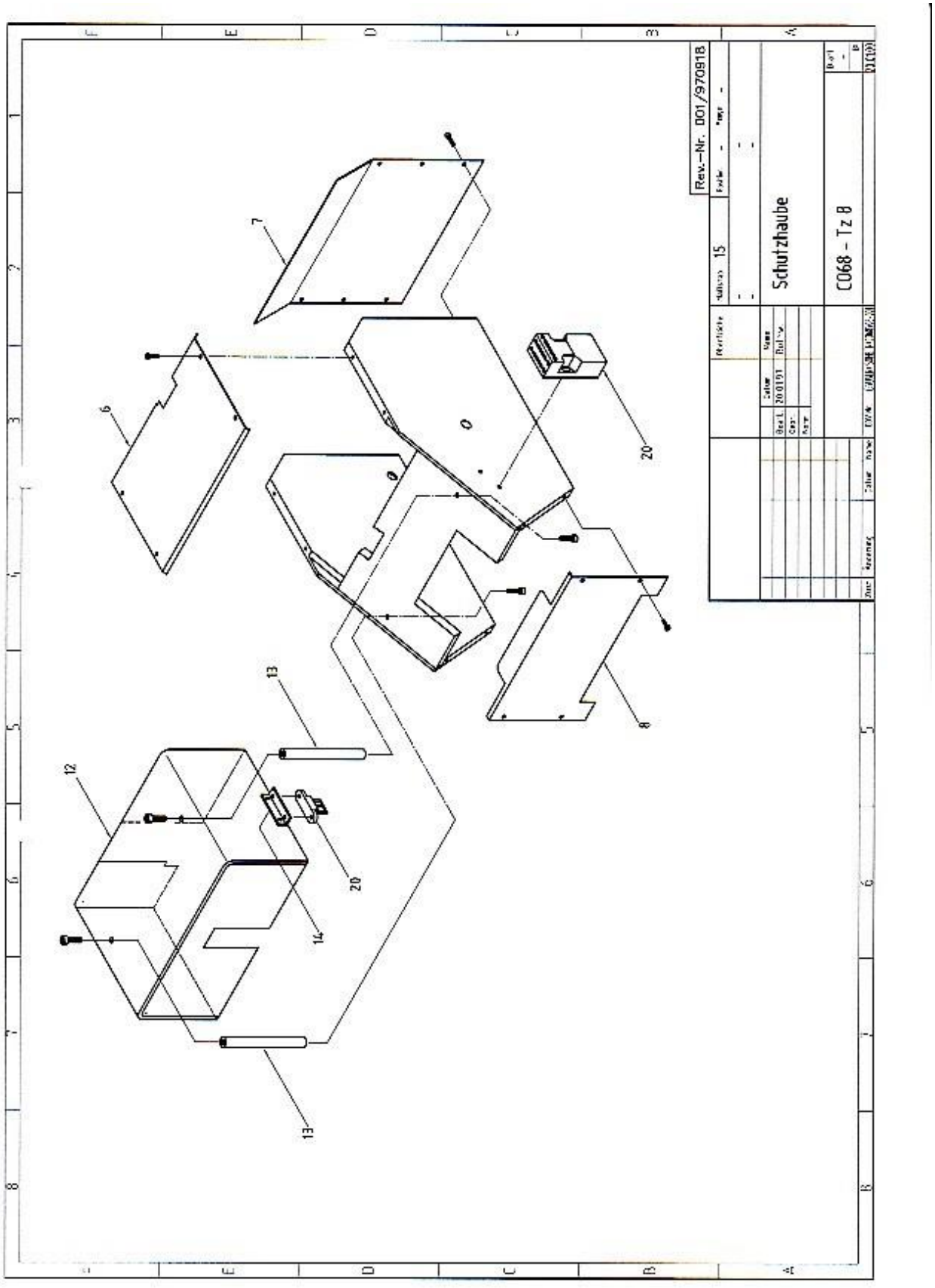
Rev.-Nr. 001/970918
Schutzhaube
C068 - Tz 8
7
6
20
8
13
12
20
14
13

Tz 9 - Magazine

Pos.	Pieces	Drawing no.	Description	Note
1	1	C068 Tz 9 T. 1	Holder	
2	1	C068 Tz 9 T. 2	Block	
3	1	C068 Tz 9 T. 3	Plate	
4	2	C068 Tz 9 T. 4	Block	
5	1	C068 Tz 9 T. 5	Locking bar	
6	2	C068 Tz 9 T. 6	Pin holder	
7	1	C068 Tz 9 T. 7	Pin	
8	1	C068 Tz 9 T. 8	Bracket	
9	2	C068 Tz 9 T. 9	Guide plate	
10	2	C068 Tz 9 T. 10	Guide plate	
13	1	C068 Tz 9 T. 13	Adapter	
14	1	C068 Tz 9 T. 14	Block	
15	1	C068 Tz 9 T. 15	Plate	
16	2	C068 Tz 9 T. 16	Sleeve	
17	2	C068 Tz 9 T. 17	Disk	
18	1	C068 Tz 9 T. 18	Attachment	
19	1	C068 Tz 9 T. 19	Gauche	
20	1	C068 Tz 9 T. 20	Block	
21	1	C068 Tz 9 T. 21	Loose feed atachment right	
22	1	C068 Tz 9 T. 22	Cap to T.21	
23	1	C068 Tz 9 T. 23	Guide	
24	1	C068 Tz 9 T. 24	Loose feed atachment left	
25	1	C068 Tz 9 T. 25	Cap to T.24	
26	1	C068 Tz 9 T. 26	Indexing plate	
27	2	C068 Tz 9 T. 27	Spring D - 063N	
28	1		Spring D - 029	
29	1		Hex nut, HM5	
31	1	C068 Tz 9 T. 31	Indexing block left	
32	1	C068 Tz 9 T. 32	Indexing block right	

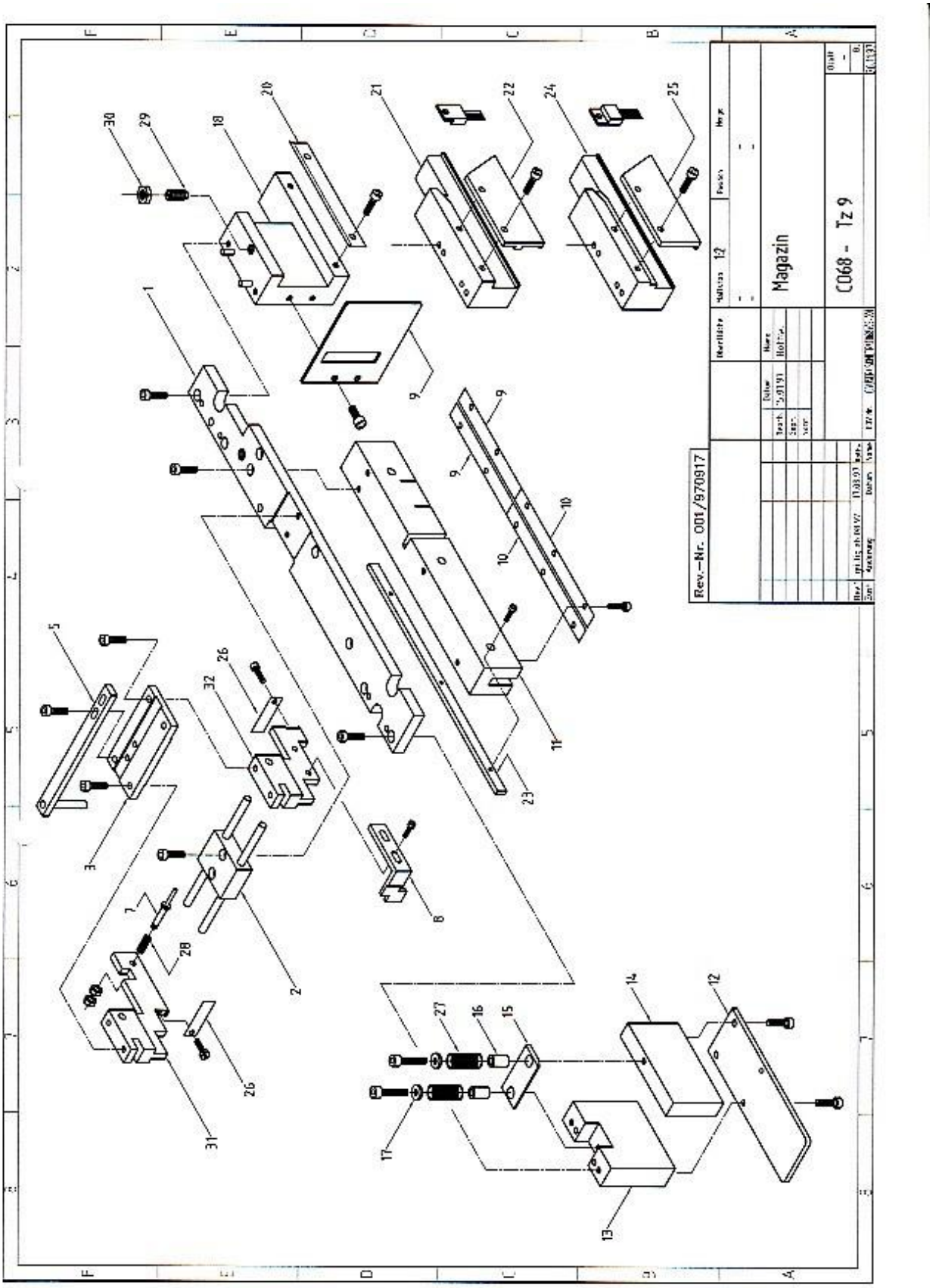
Rev.-Nr. 001/970917
Magazin
C068 - Tz 9